Introduction to SSRL diffractometers and scattering geometries

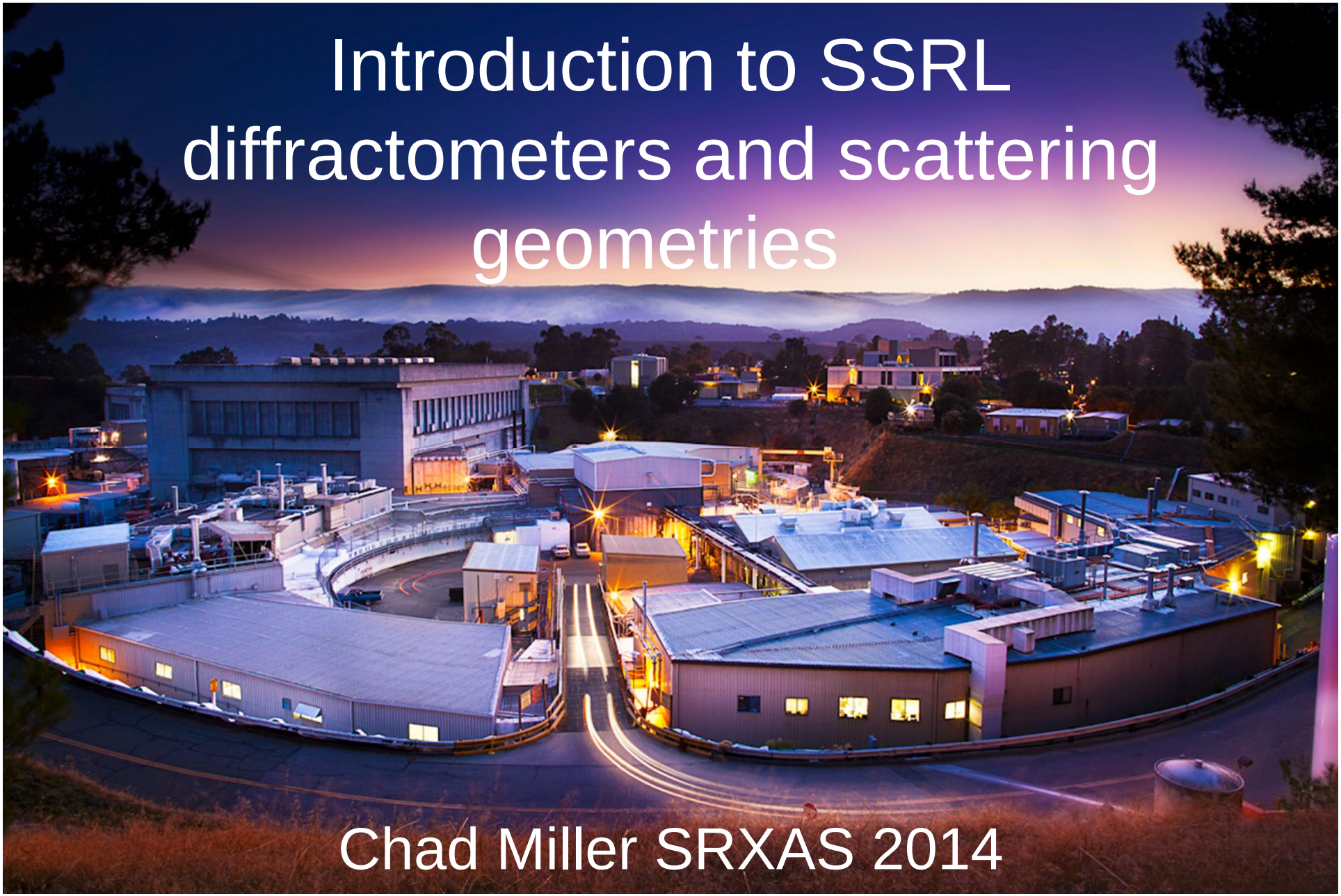

Chad Miller SRXAS 2014

WAXS on BL11-3 and BL1-5 (area detectors)

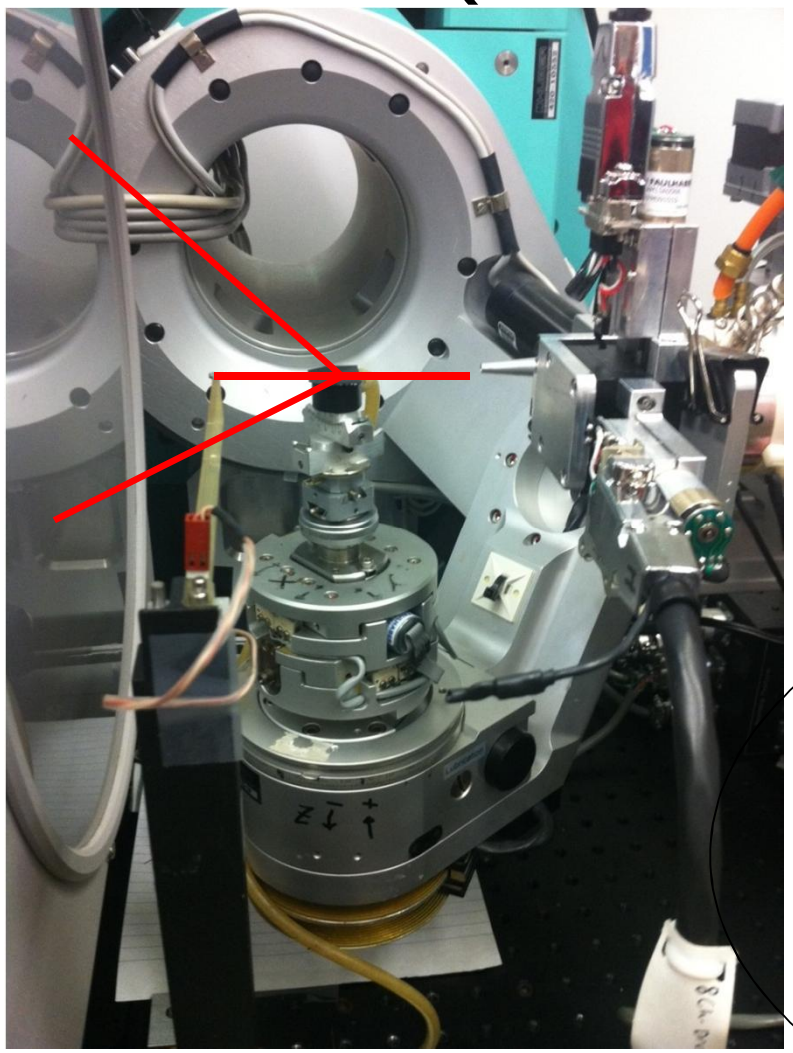

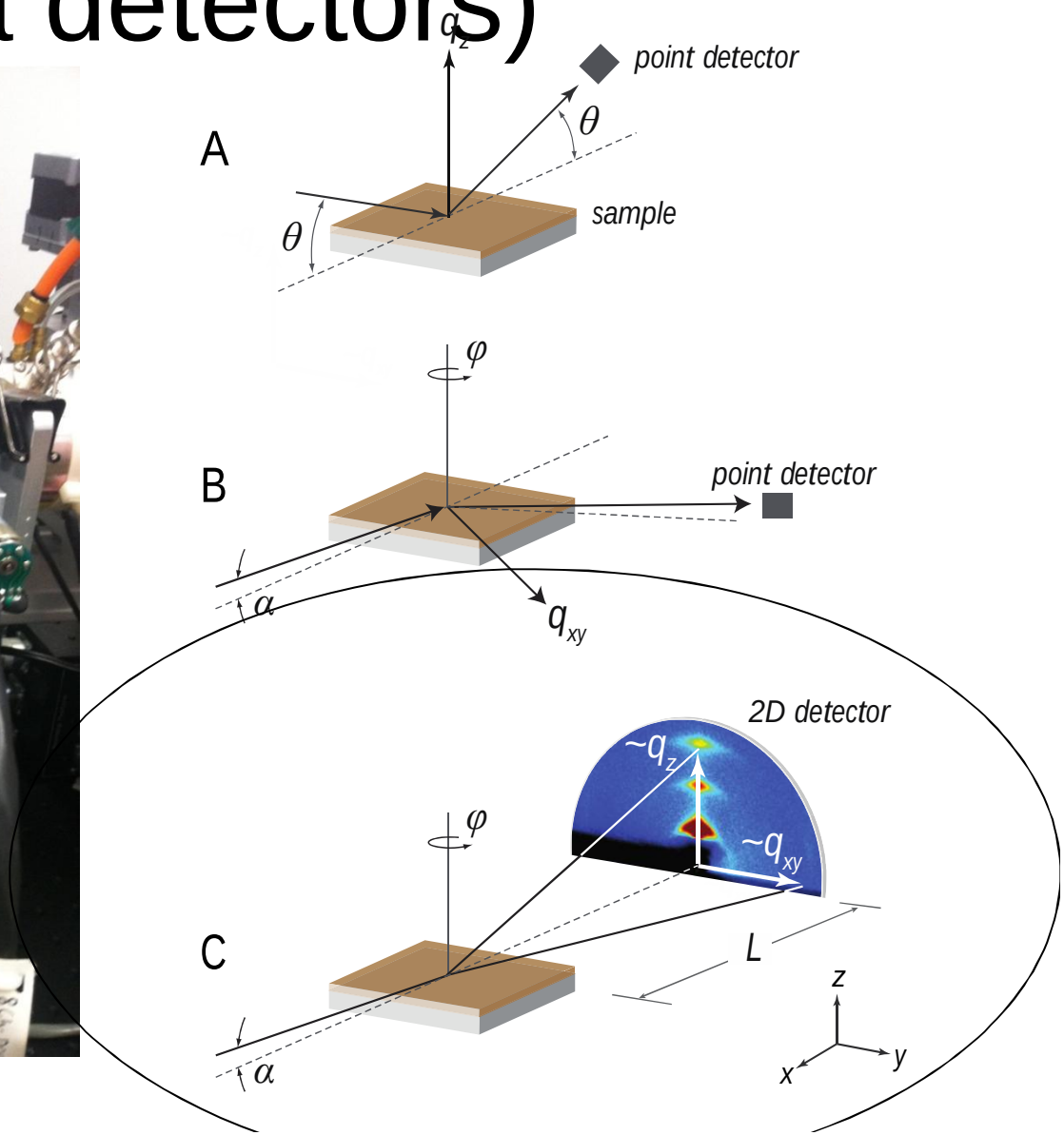

SAXS on BL1-5 (area detector)

-Small angle scattering

- Transmission and Grazing incidence small angle scattering

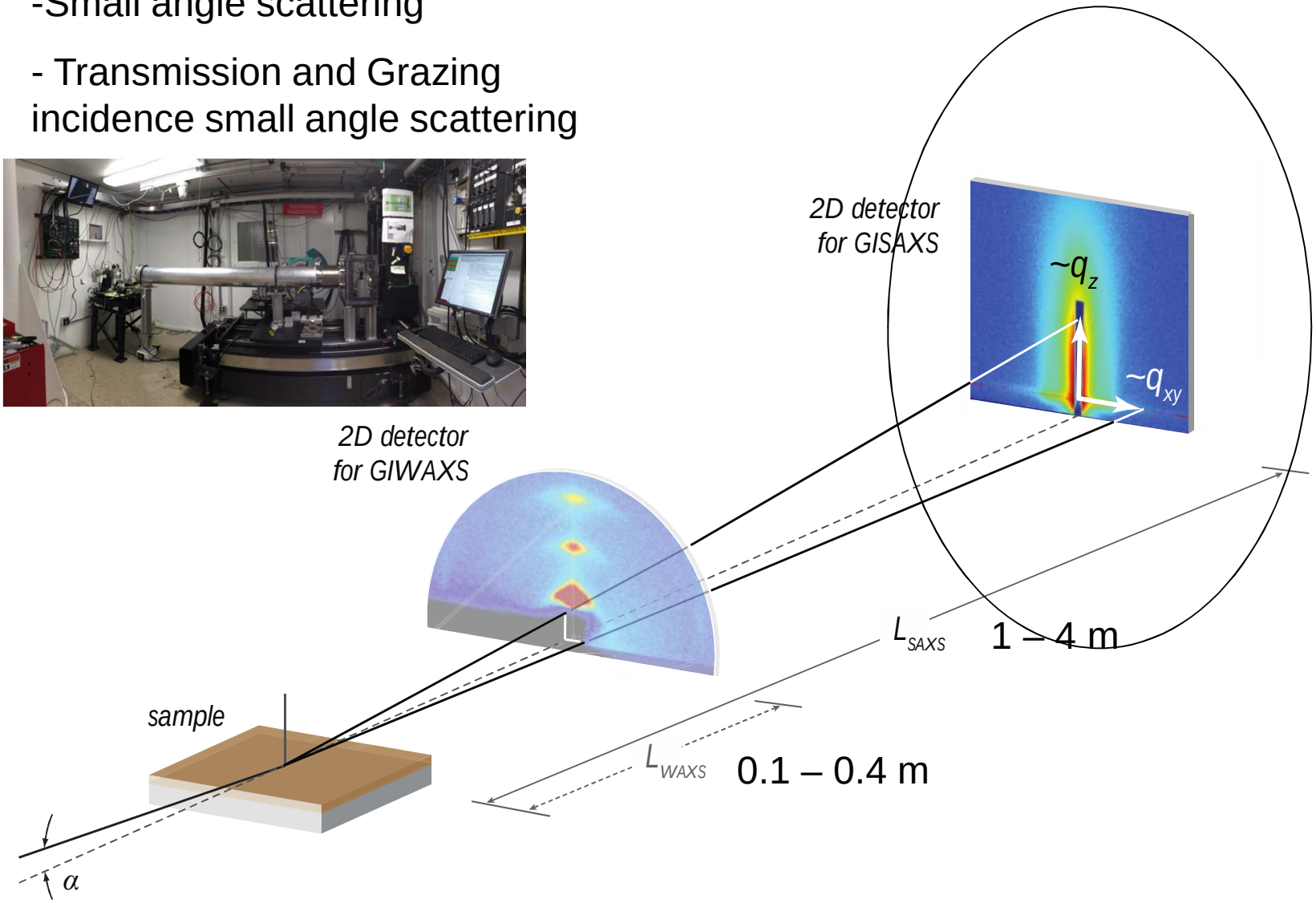

BL 2-1(point detector)

- Two Circle (1 sample + 1 detector)
- techniques:
  - Reflectivity
  - Specular Diffraction
  - Powder Diffraction

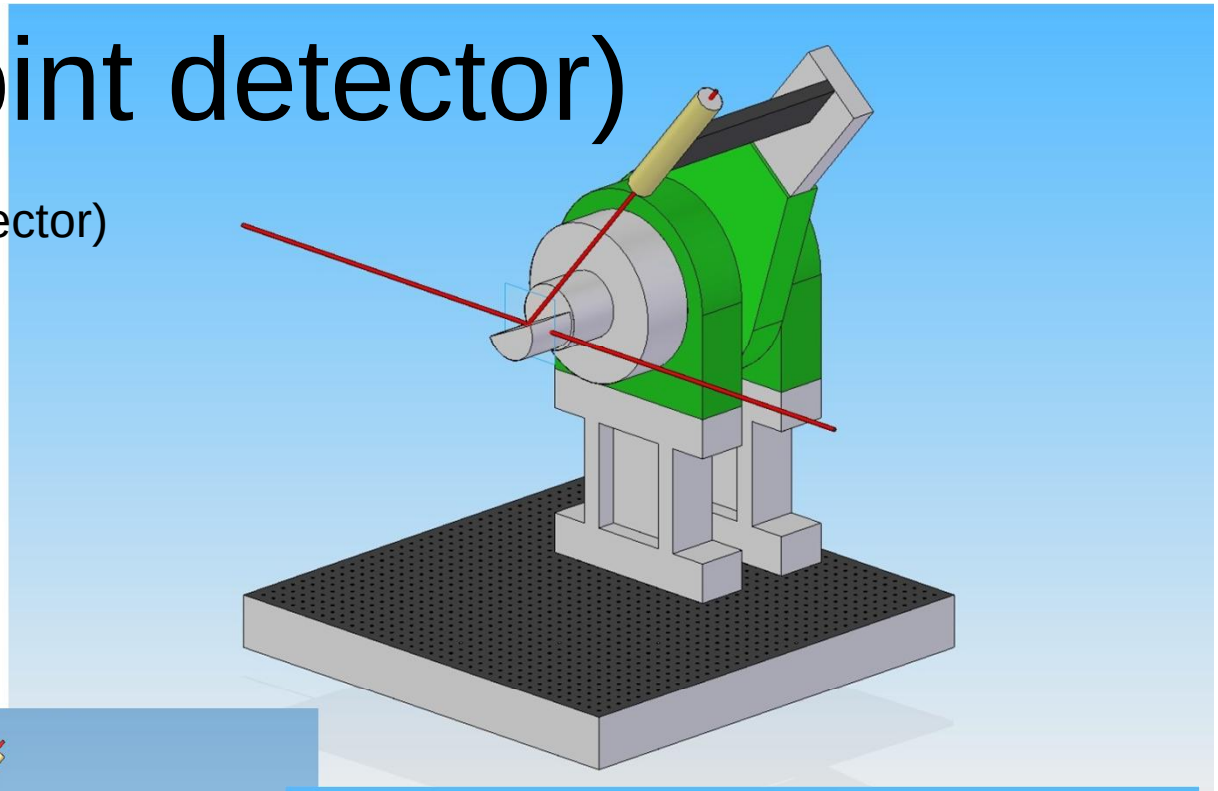

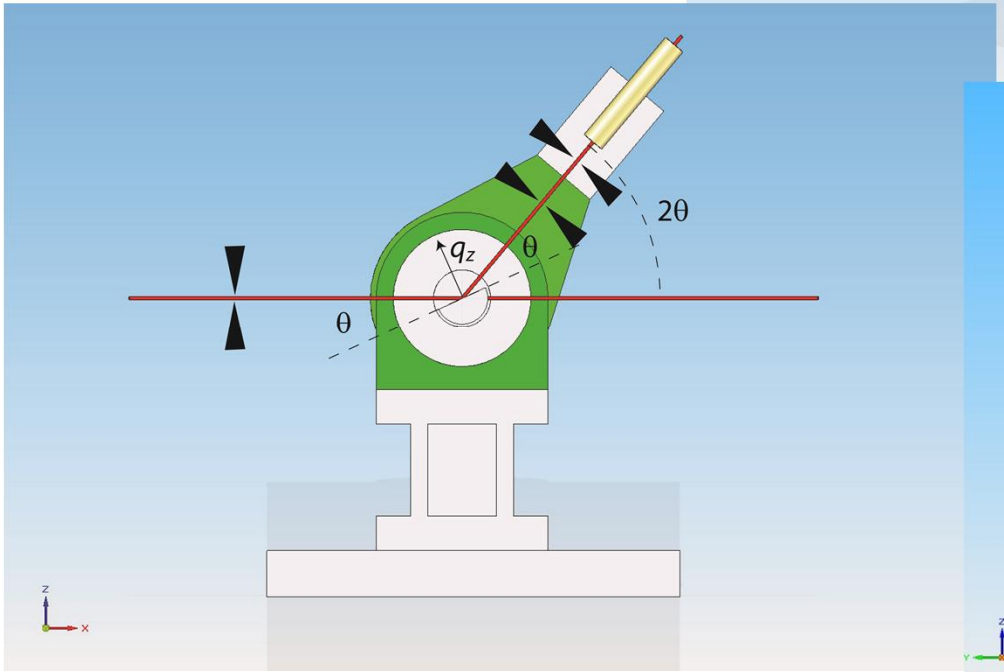

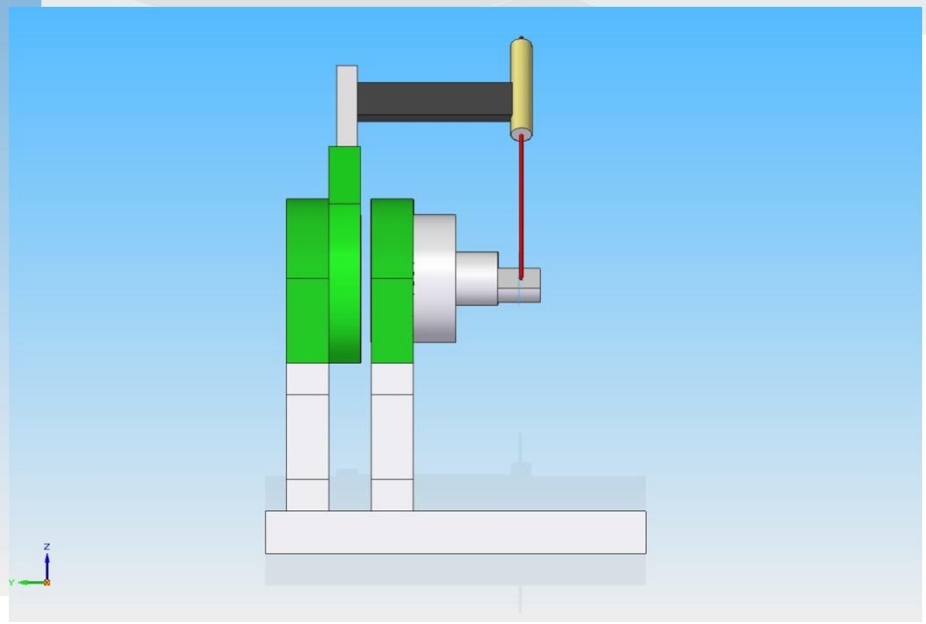

BL 2-1

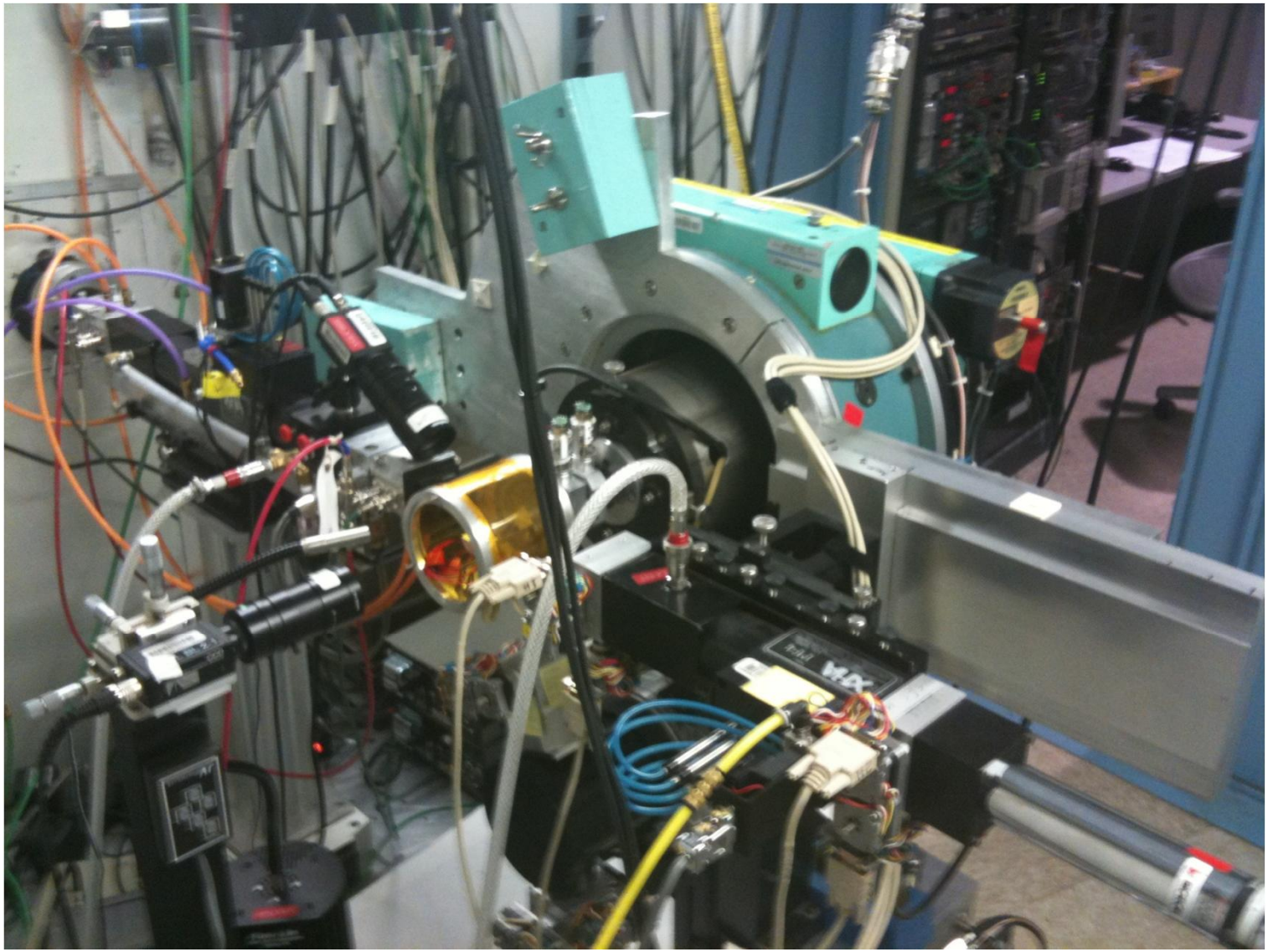

BL 10-2
(point + area detector)

- Four Circle (3 sample + 1 detector)
- techniques:
  - same as 2 circle
  - grazing incidence diffraction (in plane)
  - single crystal diffraction

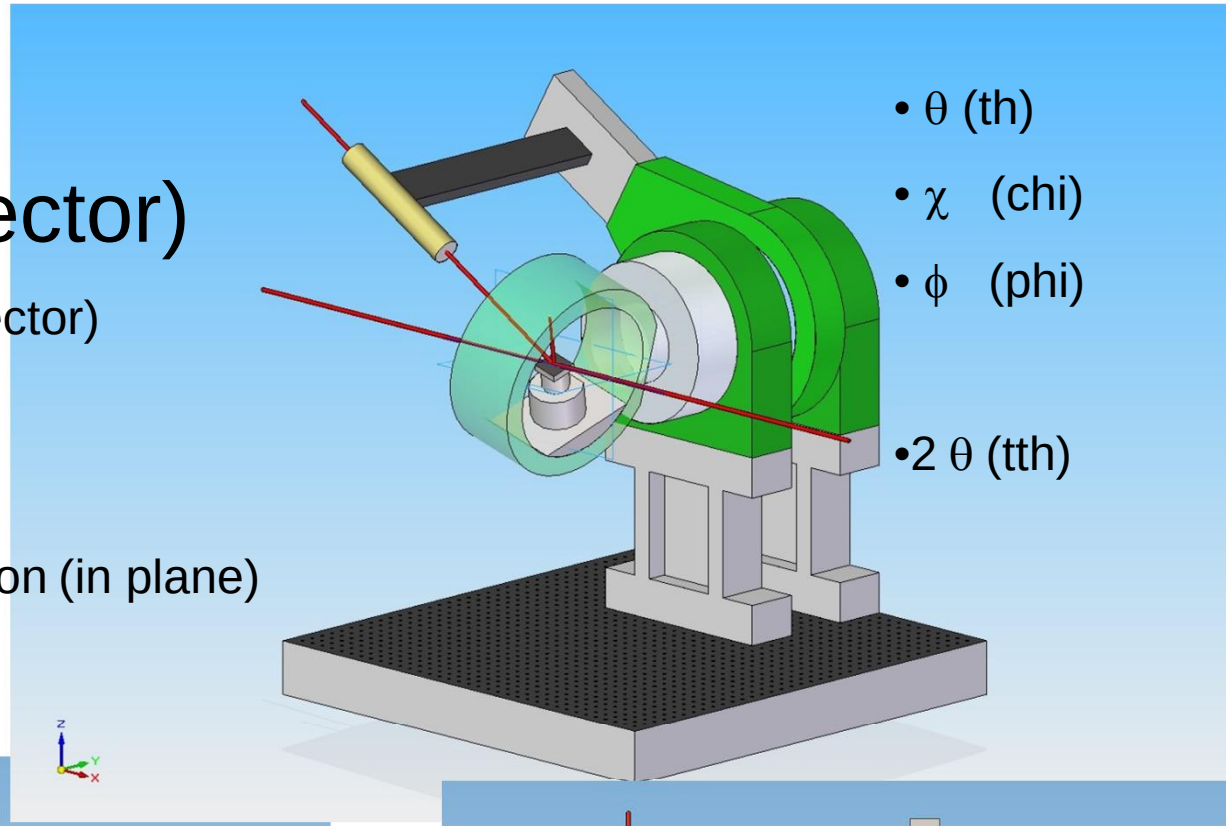

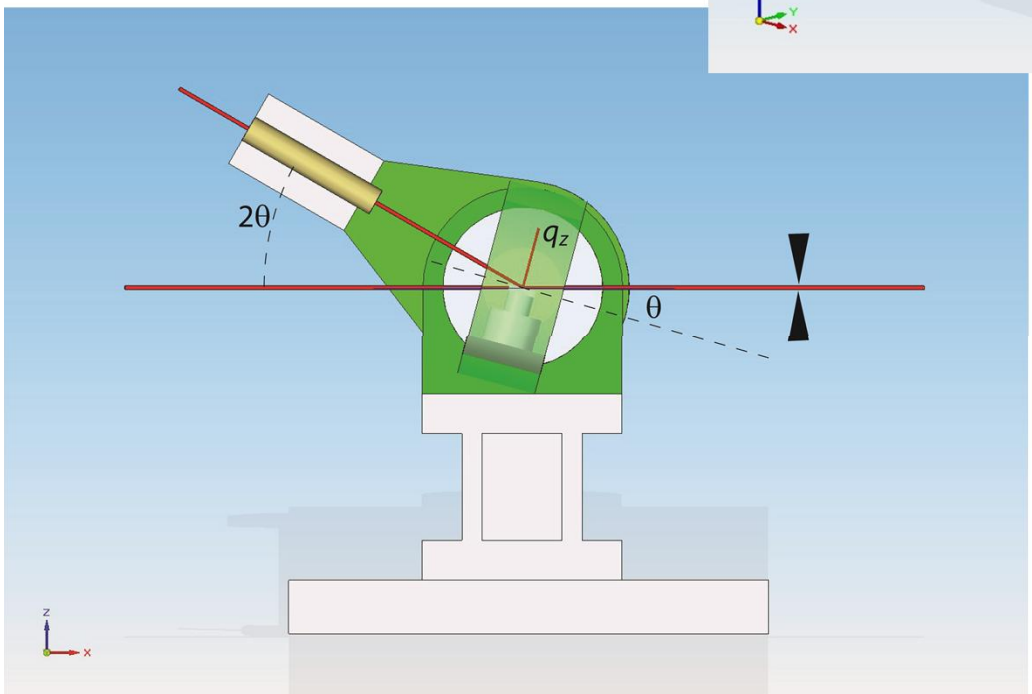

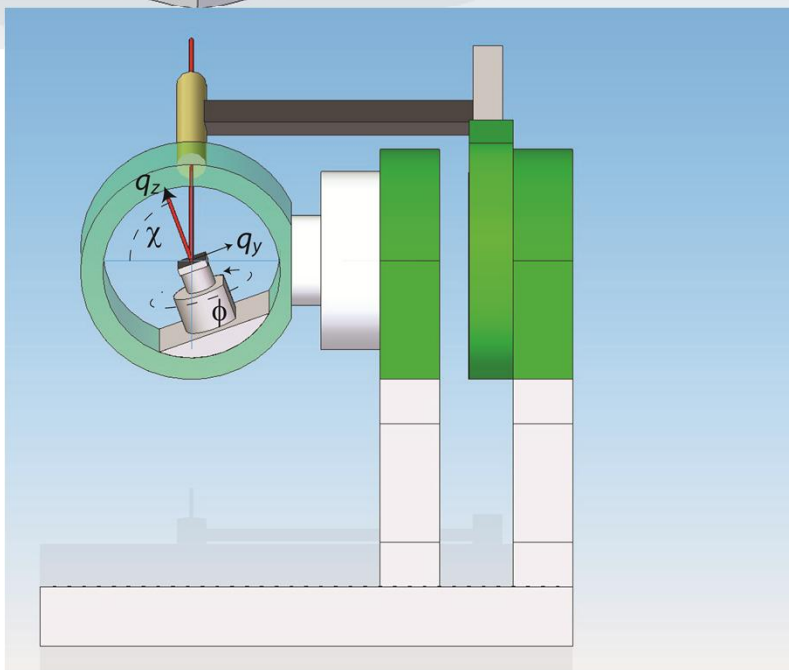

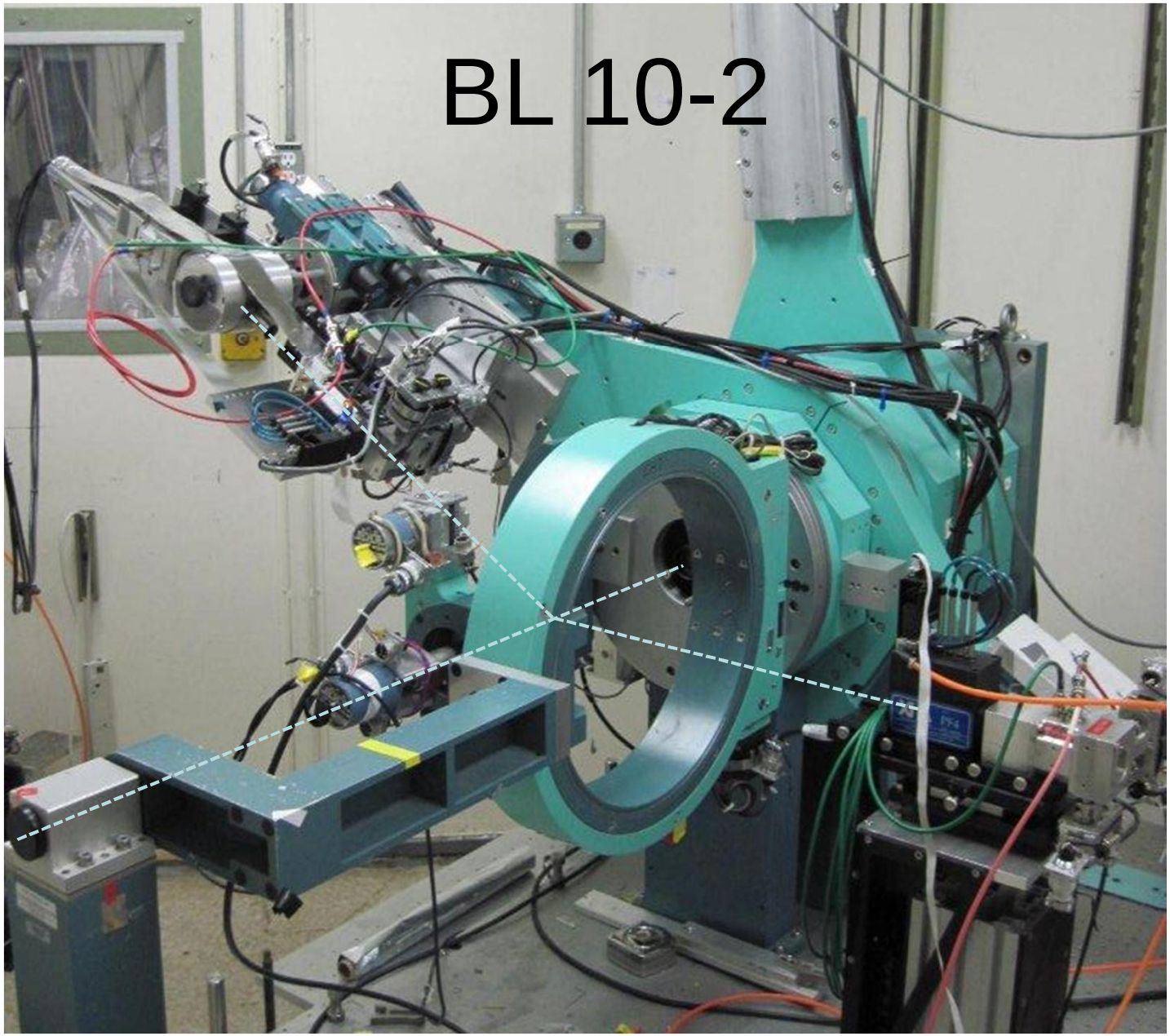
BL 10-2

BL 7-2

(point + area detector)

- Six Circle (4 sample + 2 detector)
- techniques:
  - same as 4 circle
  - (but with more options)

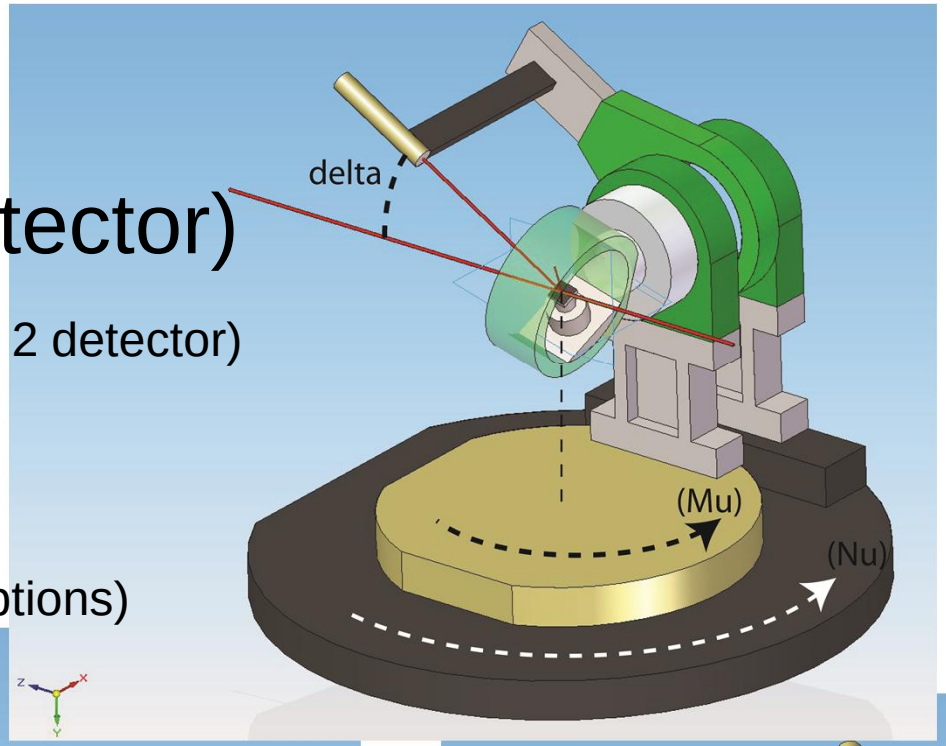

- (eta)
- χ (chi)
- ϕ (phi)
- (mu)

- delta
- nu

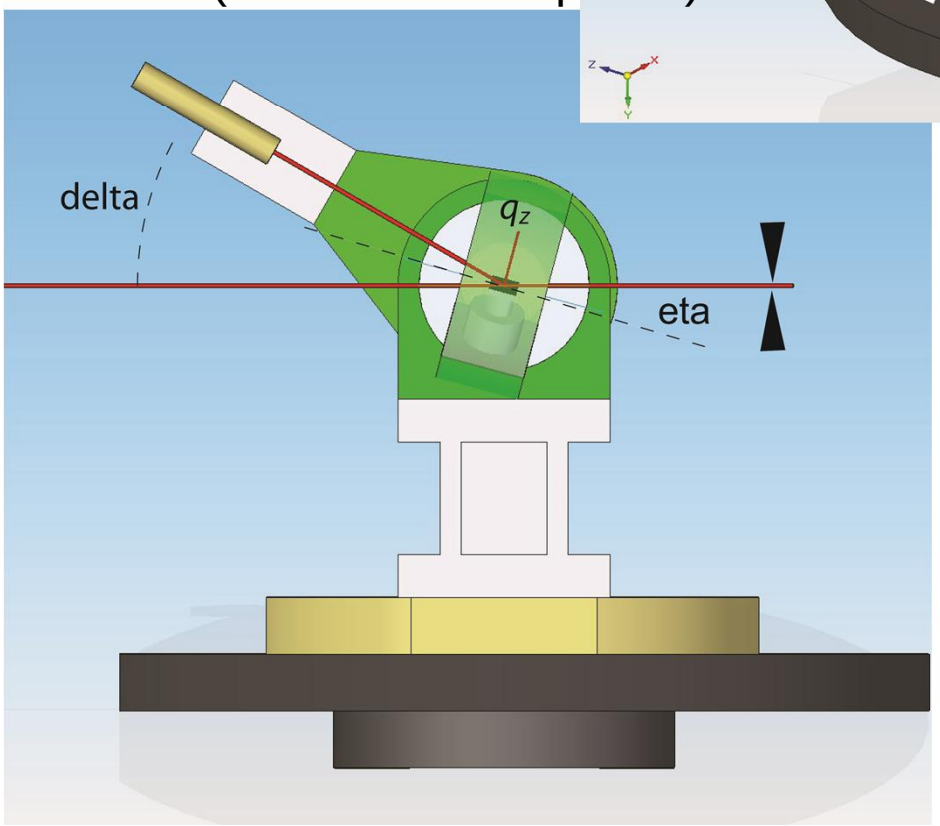

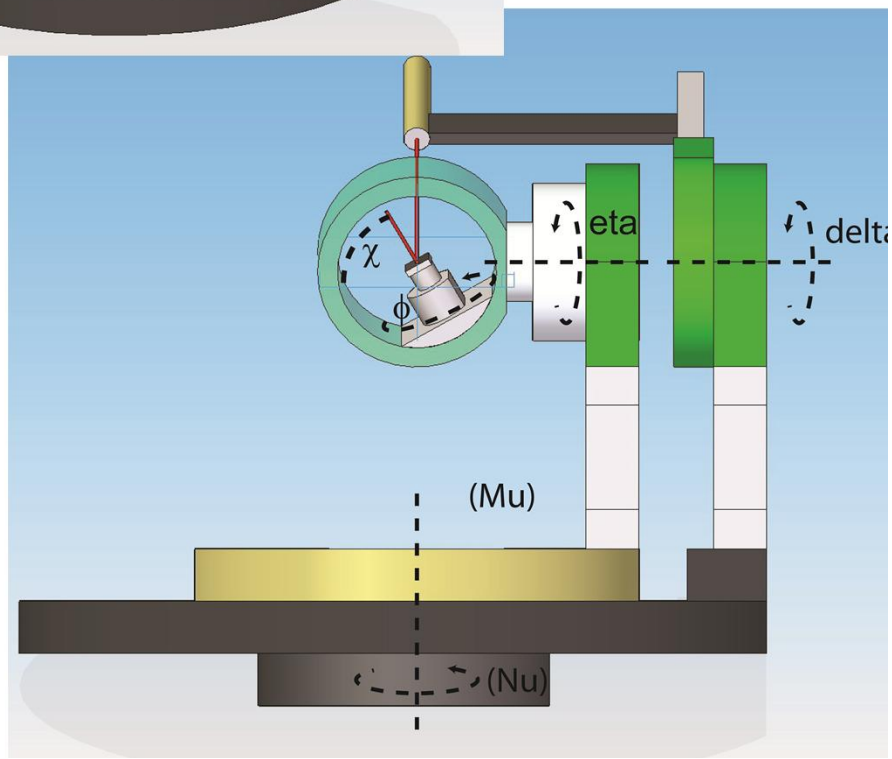
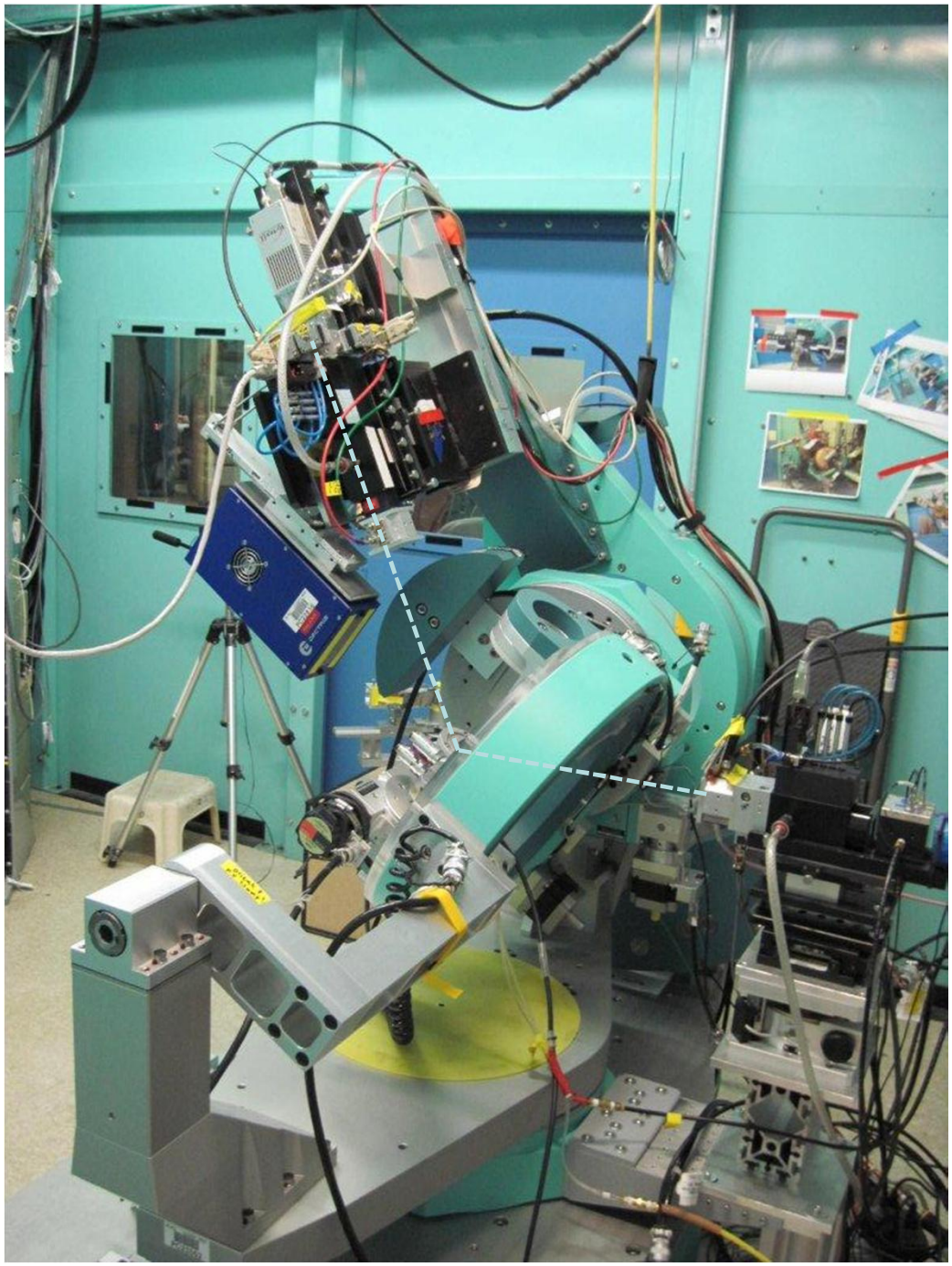
BL 7-2