LCLS Engineering Specifications Document # 1.2-102	Injector	Revision 1

LCLS Injector Gun Solenoid Magnets

Roger Carr (Author)	Signature	Date
John Schmerge (LCLS Physicist)	Signature	Date
Eric Bong (System Manager)	Signature	Date
Cecile Limborg (System Physicist)	Signature	Date
Dave Schultz (Electron Beam System Manager)	Signature	Date
Darren Marsh Quality Assurance Manager	Signature	Date

Change History Log

Rev Number	Revision Date	Sections Affected	Description of Change
000		All	Initial Version
001	7-19-02	All	Completely Revised

Check the LCLS Project website to verify that this is the correct version prior to use.

1.0 General

All communications concerning this specification shall be in English. Measurements and dimensions shall be in inch units.

1.1 Scope of the Specification

This document describes the technical details of a proposed fabrication order for the photocathode gun solenoid magnet for use in the Linac Coherent Light Source (LCLS) injector beamline at SLAC.

1.2 Deliverables

This specification is for a build-to-print magnet that will conform to the attached SLAC drawings SA-380-302-01, rev 1 and associated drawings in a package included with this document. If there is any confusion, the drawings take precedence over the ESD. The magnet assembly comprises the following main components.

- Eight epoxy impregnated pancake coils of hollow square copper conductor
- Seven flux straightening disks between the coils
- End plates and flux returns
- A dipole and quadrupole corrector structure, with terminations
- Thermal switches, coil conductor and cooling water terminations
- Identification and test certification plate

The vendor shall comply with the specifications in this Engineering Specification Document as to packaging and shipping, and shall assume responsibility for meeting these specifications as to materials, mechanical, electrical, and magnetic tests upon delivery to SLAC. Each magnet shall be delivered with documentation that certifies:

- The materials required under this specification
- Satisfactory mechanical quality assurance results at the Vendor's location, including flow and hydrostatic tests.
- Satisfactory electrical quality assurance results at the Vendor's location, including electrical and magnetic tests.

The Vendor shall also deliver two extra coils, both of which have passed all electrical, fluid flow and pressure tests. The Vendor will agree to retain any special tooling associated with this order for a period of one year after completion of the order.

We will ask responders for two bid figures:

- Bid for two complete magnets with one extra pair of coils.
- Bid for one magnet, with an option to buy a second one within one year, each with an extra pair of coils.

2. Magnet Design and Fabrication Requirements

2.1 Magnet Design Parameters

Some basic parameters of the magnet are shown in Table 1:

Parameter	Value	Units
Maximum axial field on-axis	3.15	kG
Maximum current	269	A
Minimum cooling water flow @100psig/coil	0.45	gpm
Maximum pressure drop at minimum flow	75	psi

Table1: LCLS Injector gun solenoid magnet parameters; other parameters are to be found in the drawing package.

This document calls for the Vendor to build these magnets according to the drawings, materials specifications, and processes described in the enclosed drawings and the text below.

2.2 Poles and Flux Returns

2.2.1 Material Specification

The flux straightening plates, endplates, and flux return yokes shall be made from solid, certified AISI C1006 steel, or a material equivalent or superior in saturation permeability and remnant field. These magnets will be used in a DC mode, and not for time-varying fields.

2.2.2 Fasteners

Fasteners must be either non-ferromagnetic or if they are ferromagnetic, they must not contribute to remnant fields. They must be satisfactorily corrosion resistant.

2.2.3 Paint

The magnet iron shall be plated with at least 15 μm of low phosphate electroless nickel, or equivalent corrosion protection approved by SLAC. Paint or powder coating is not acceptable, because the attached photocathode gun is baked to 200 C.

2.2.7 Identification

Each magnet assembly shall have affixed to the outer surface of an upper part of the yoke a metal identification plate stating:

- The identifier “LCLS Injector Gun Solenoid Magnet”
- Number of magnet within this production schedule
- Name of Vendor, and date of completion
- Indication of successful completion of mechanical tests
- Indication of successful completion of electrical tests
- “SLAC Drawing Number SA-380-302-01, rev. 1”
- Total weight of magnet in pounds.

Each magnet shall also have a white painted arrow on each side pointing in the direction shown in the drawing, with ‘Beam Direction” lettered on the shaft of the arrow (with at least 1 cm high characters), thus:

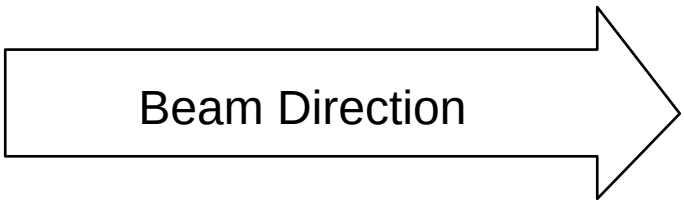

2.3 Coils

2.3.1 Requirements

The coils for these magnets shall be of a hollow square copper conductor, epoxy-impregnated, water-cooled design. The conductor specifications are detailed in Appendix 2, below.

The main coil terminals shall be fitted with a removable cover or covers that prevents contact with exposed magnet and power supply conductors, including swaged hose fittings that extend 3" cm above the end of the water connection. These covers shall meet the specifications given in Appendix 1, below.

The trim coils and thermal switch connection may be made by a terminal block, for example Marathon 670A-4 type, with Marathon CB-104D type safety covers; equivalent products from other manufacturers are acceptable.

The coils shall be impregnated with epoxy according to the specifications in Appendix 3, below.

The Vendor may fabricate or procure the coils required for these magnets. The Vendor shall make available to SLAC details of the winding process, including the design of the winding and potting fixtures, if SLAC requests these.

2.3.2 Burn-in

After full assembly, the magnets shall be operated with coils at maximum current for a period of not less than 4 hours continuously, with cooling water at 100 psig and flow as specified in Table 1.

3. Tests and Measurements

3.1 – Materials Qualification

Certification for the materials used for the ferromagnetic flux returns and poles, copper coils, insulation, and impregnation materials shall be supplied.

3.2 – Mechanical Qualification

When fully assembled, the endplate apertures shall be concentric to within 0.002".

3.3 – Electrical Measurements

After full assembly of the magnet, the main coils shall be tested individually for resistance and found to be within ±1.5% of each other at room temperature, The main and trim coils shall be tested at 1 kV DC for 1 minute, and found to have less than 2 mA leakage to the yoke, and to the other coils.

3.4 –A bucking measurement shall also be performed pairwise on the coils. When current is sent in opposite directions in each coil, a Hall probe on the axis, halfway between the two coils shall be used to monitor the field produced, and this measurement shall be used to verify that there are no short circuits in the coils. Each coil shall be involved in at least one pair measurement.

4. MEASUREMENTS at SLAC

SLAC will perform quality assurance tests on the magnets upon receipt. These measurements may include testing of:

- The materials, to assure that they meet certification.
- The mechanical construction, to assure that it conforms to design drawings.
- The coils, to assure that they meet electrical, magnetic, flow, and hydrostatic specifications.
- Magnets that do not pass any of these tests at SLAC may be rejected or returned to the Vendor for rework, with shipping at the Vendor's expense.

5. Delivery

5.1 Shipping Crates

Magnets shall be fully assembled and packed individually in crates. The shipping crate shall be attached to a pallet so that it can be moved using standard handling devices (forklift or pallet jack). Irreversible indicators that record vertical shock loads of more than 10 G shall be attached to each crate.

5.2 Environmental Protection

The magnet shall be covered or wrapped to protect it from moisture and dust within the shipping crate. It shall be properly braced and cushioned within the shipping crate so that it will not shift within the crate during handling and shipment.

5.3 Marking

Each crate shall be labeled on the outside with:

- The identifier "LCLS Gun Solenoid Magnet"
- the name of the receiver, Carl Rago.
- the address of SLAC, 2575 Sand Hill Road, Menlo Park, CA 94025, USA
- the serial number of the magnet inside
- the gross weight of each crate,
- conspicuous arrows to indicate its upright position.

Appendix 1: Magnet Terminal Cover Guidelines: SLAC-I-730-0A11S-003-R000

Purpose

The purpose of magnet terminal covers is to prevent accidental or inadvertent contact with exposed live electrical parts.[1] The following recommended guidelines are for designing safe terminal covers for exposed live parts.

Requirements for covering live parts are described by DOE, OSHA, NFPA, ANSI, NEMA, *UL*, and SLAC documents. See references for specific details.

Applicability

When the terminal voltage is over 50 volts DC, or over 50 volts AC_{rms}, or the terminal has over 10 joules of stored energy, then either the terminal needs to be covered and the appropriate voltage sticker attached, or the terminal energy source must be interlocked to the PPS electrical hazard circuitry .[2]

Recommended guidelines

a. Conductive covers must be grounded and have a 1/2 inch separation or more between the live part and the cover where the voltage does not exceed 250V. This spacing shall be increased to at least 1" for voltages 251 to 600 volts, nominal. [3] For voltages above 600V, see NEC article 710-33. (See Figure 1.) Non-conductive covers must have at least the equivalent insulation to the conductors/ of the maximum operating voltage up to 600 volts. Conductive covers are required above 600 volts.[4]
b. Any unused gap or hole in the cover shall be no greater than an 1/2 inch. This includes gaps between conductors and covers. If the distance between the opening and the nearest live part is more than 4 inches, a gap shall be no greater than 3/4". Use Rod test as described in NEMA 250-6.2.1.2[5]. (See Figure 2.)
c. A WARNING - Electrical Hazard and/or WARNING - High Voltage sticker must be attached to the cover as appropriate.[6]
d. The preferred cover-material is conductive and non-combustible. Conductive covers must be grounded locally. Class 1 or Class A combustible material such as fire retardant - wood, polymer, or

equivalent material may be used after review by the fire protection engineer.[7]

e. Temporary covers, installed for 6 months or less, must have at least the mechanical strength and electrical insulating properties equivalent to the insulator of the conductor[8]. For example, properly installed rubber roll and tape may be used with approval of the Accelerator Department Safety Officer (ADSO) or SSRL Safety Officer.

f. A sufficient number of fasteners must be used to mechanically secure the cover in place.[9]

g. New or retrofitted covers must be inspected by the ADSO or SSRL Safety Officer before circuit operation.

h. Significant variations from the above guidelines must be approved by the Laboratory Director (the SLAC Authority Having Jurisdiction (AHJ)) with advice from the Electrical Safety Committee.

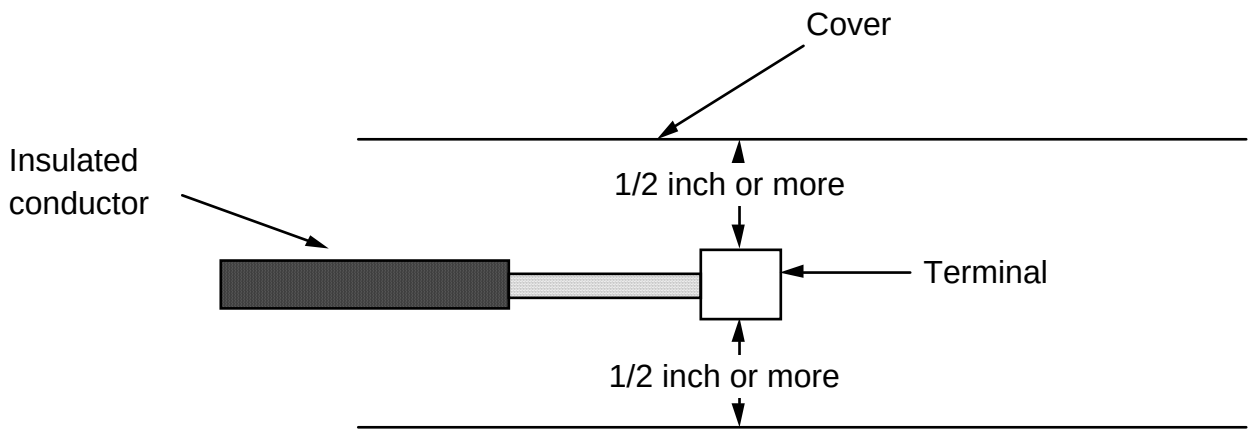

Figure 1

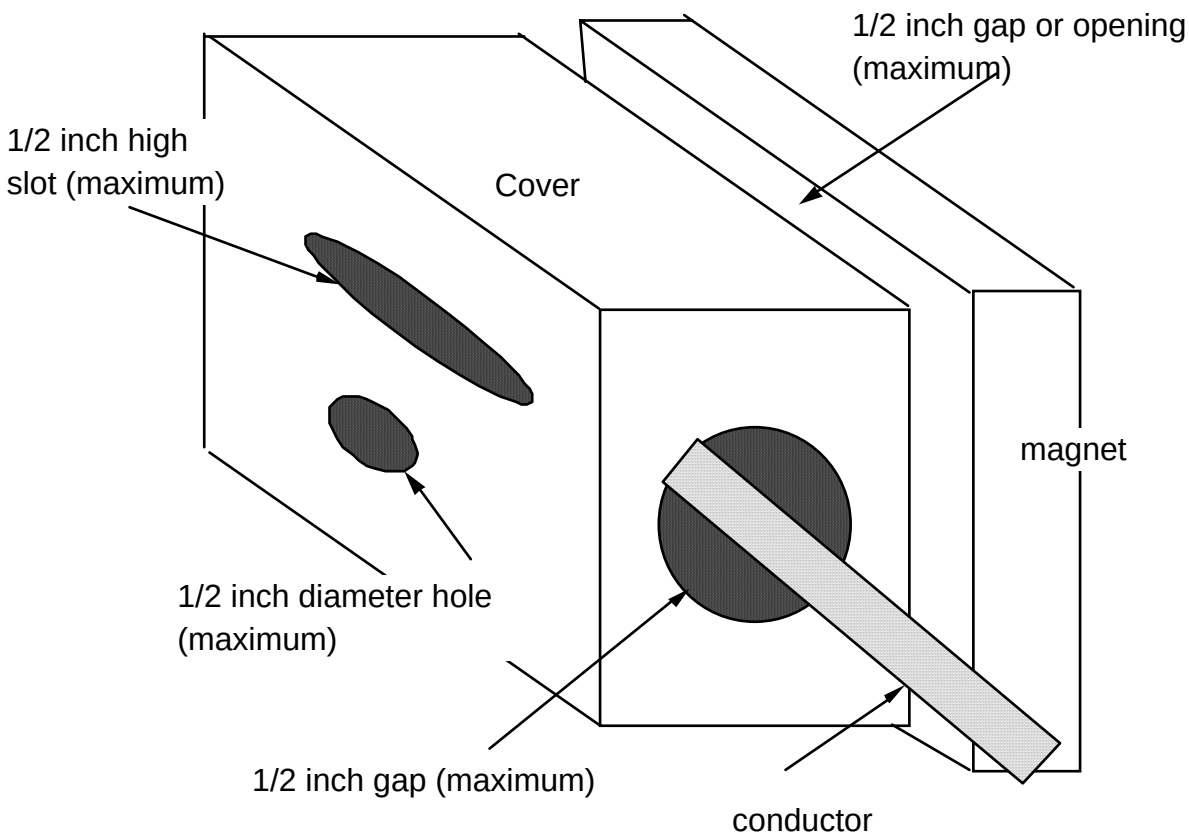

Figure 2

1 NFPA —National Fire Protection Association: National Electrical Code (NEC), article 110-17.
2 SLAC — Stanford Linear Accelerator Center: Operational Safety Policy(OSHA Electrical Hazards Related to Electromagnets in Accelerator Areas, section V - C.
3 NFPA—NEC, article 373-11 (a)(3).
4 OSHA — 29CFR1910.303(h)(2)(ii).
5 NEMA — National Electrical Manufactures Association: Standard 250 Enclosures for Electrical Equipment (1000 Volts Max.), section 6.2.1.2.
6 OSHA —29CFR,1910.14S(f)(7).
7 DOE — Department of Energy: DOE Order 5480.7A Fire Protection, section 9-3.
8 OSHA — 29CFR1910.303(b)(l)(ii)&(iii).
9 SLAC – ES&H Manual chapter 8-7.3

Appendix 2: Copper Conductor Specification adapted from NSLS Dwg # SLS-07.111-001

1. Materials: The chemical compositions and properties of the copper conductor shall conform to ~ CDA Copper Number C 10200.

2. Conductivity: The copper conductor shall have a conductivity of 100% of the International Annealed Copper Standard. This value shall be met in the soft annealed condition. The Vendor shall submit to Purchaser the certified copies of the measurement made on the lots supplied.

3. Temper: The material as furnished ready for winding shall be in the soft annealed condition.

4. Conductor size and tolerance: Conductor size and tolerance shall be specified in the purchase order.

5. Conductor lengths: Conductor length shall be specified in the purchase order. Each coil shall be made from a single continuous length, with no joints.

6. The conductor shall be shipped level wound into a coil with 1.22 meter (48 inches) minimum inside diameter, if so specified in the purchase order.

7. Workmanship: The material shall be uniform in quality and temper and shall be sound, clean, smooth, and commercially free of injurious defects such as slivers, laps, seams, or cracks, and damaged corners or edges.

8. Shipment: The copper conductor shall be prepared for shipment in such a way as to ensure acceptance of common carrier and to afford protection from the normal hazards of shipping.

Appendix 3: Coil Fabrication Specification, adapted from NSLS Dwg # SLS-07.111-002

1. General

This specification defines the minimum requirements governing the fabrication, inspection, testing, and packaging of the exciting coils to be used in magnetic components for accelerator applications.

It must be accepted that the contents of this specification and appropriate drawings are mandatory. No deviations or alternatives shall be permitted without the written approval of the purchaser or his designated representative.

2. Scope

A. Except as otherwise provided herein, the seller shall furnish all labor, materials, and tooling for the fabrication, inspection, testing, and shipment of the coils stated in the purchase order. The purchaser will inspect all coils for compliance with the applicable documents.

B. Written certified reports shall be prepared for all tests and inspections performed under the provisions of this specification and appropriate documents.

3. Approval

A. Equivalent materials and parts, except the conductor proper, may be substituted for those identified with a particular supplier, but no such substitution shall be made prior to receipt of written approval from the purchaser.

B. Approval of these materials and procedures shall not relieve the seller's responsibility of producing satisfactory magnet coils.

4. Materials and Parts

A. Conductors - shall conform to the specifications in Appendix 2 of this document.

B. Electrical Insulation and. Structural Impregnantion - the coils shall be subjected to long-term radiation exposure. Therefore, the coil insulation system shall not only be suitable for electrical and mechanical properties, but also must be able to. withstand a minimum radiation dose of 10^7 rad. The following system is believed to be capable of satisfying the above mentioned operating condition. The seller is required to state in his bid specifically the type of system he will be using in insulating these coils.

a. Turn Insulation - Volan A or Amino Silan treated, medium, plain weave, glass fiber tape, or equivalent.

c. Filler Block - Fiber glass block NEMA grade G-lO.

d. Suggested Epoxy System; the Vendor may choose another system, which must be approved by SLAC.

i. Resin - Diglycidyl either of bis phenyl A Epoxy DER 332 *50%* by weight, by Dow Chemicals Co.

Flexibilizer - DER 736 *50%* by weight, by Dow Chemicals Co.

ii. Hardener - Methyl-Nadic-Anhydride NMA 90% by weight of (i), by Shell Chemical Co.

iii. Accelerator - Dimethyl Amino Methyl Phenols DMP-30 1% by weight of (i), by Rohm and Hass Co.

5. Coil Fabrication

A. Coils shall be fabricated in an area free of metallic particles, dirt, and welding or chemical fumes. Conductors, insulation materials, and coils shall be protected from dirt,moisture, and damage during fabrication, handling, and storage.

B. Conductor Preparation and Handling

a. Cleaning and Handling

Exterior surfaces of all conductors shall be thoroughly degreased prior to the insulation process. The copper surfaces and insulating materials shall be protected from skin oil, etc. by using clean gloves.

b. Grit Blasting

Grit blasting is optional.

C. Splicing

No internal splices of the conductor are permitted.

D. Brazing

a. All brazed joints shall be made without flux using AWS-ASTM BCUP-5 silver solder alloy (Handy-Harmon 'Sil-Fos' or an approved equal). The joint shall be neat, clean, and show no porosity.

b. After making up a joint, all excess braze material shall be removed by filling flush with the adjacent braze-free areas.

E. Corner Build-up

In making edgewise bends, it is anticipated that the copper will upset and assume a trapezoidal shape. It is not mandatory to have this upset removed as long as the conductor size does not exceed .008 inches (.004î per side) more than its original height. Should removal of the upset material become necessary, the coil shall be carefully cleaned of all metallic chips, shavings, dirt, and other foreign materials and sharp corners shall be rounded after the removing operation.

G. Impregnation and Curing

a. Impregnation Form

After completion of wrapping and testing, each coil shall be placed in a liquid tight mold designed to establish final coil dimensions without permitting any pockets or sections of clear, unreinforced

resin of a thickness more than .060 inches.

b. Impregnation Conditions

Coil and form shall be heated and the enclosed volume pumped down. When temperature throughout the entire coil stabilizes at required level ±5F and the pressures reach the desired value, impregnation may begin. Temperature and pressure shall be held constant throughout impregnation.

i. Temperature:

For the purchaser suggested epoxy system 120 ±5F.

ii. Deaeration of Epoxy Mix:

After mixing the resin and hardener, place the mixture in a vacuum deaerating tank provided with suitable viewing ports and pump down to a pressure lower than 200 micron. Accelerator DMP-30 should be added to already deaerated mixture 5-10 minutes prior to impregnation. A vacuum pump of sufficient capacity is required to avoid excessive pump down time. If mixture foams excessively, reduce pump down rate. Vacuum tank should be connected to the mold with suitable plumbing and valving to allow flow of the epoxy mixture under vacuum into the mold at the moldís lowest point. Mold should be sloped with a transparent exit stand pipe connected to the highest point of the mold and shall have sufficient capacity to compensate for liquid shrinkage in the mold.

iii. Deaeration of Coil and Potting Mold Assembly:

Coil and potting mold assembly shall be pumped down at the

highest point of the mold. A vacuum pump of sufficient capacity shall be used to pump mold down to a pressure lower than 200 micron in a reasonable time.

iv. Impregnation shall commerce only after the mold vacuum has been reached and stabilized.

c. Breaking Vacuum

To keep air out of the thermoset, the vacuum shall be broken slowly, with the air jet entering the mold deflected in such a manner as to prevent direct impingement on the thermoset surface.

d. Back Pressuring

After pressure within the form rises to atmospheric, a back pressure of 10 psig mm. shall be applied to the stand pipe and resin inlet for suitable length of time to assure void free coil assembly.

e. Curing

The curing will be done by the use of oven facilities. The curing cycle will be four hours at 180 ±5F followed by ten hours at 265 ±*5F*. The coil shall be cooled to 140F max. in not less than five hours to minimize distortion. Throughout the whole curing, thermal gradients shall be minimized to prevent coil distortion. If thermosets other than those recommended by the purchaser are used, the seller shall submit to the purchaser for approval the proposed curing schedule prior to impregnation.

f. Repairs

Cast or impregnated coil surfaces shall be free of voids, fissures, cracks, or other defects. Coils with defective or damaged internal insulation shall be rejected and shall not be repaired. External defects may be repaired, contingent in each instance upon prior purchaser authorization, including approval of the procedure and materials to be used in effecting the repair.

g. Surface Cleaning

Completed coil assemblies may be cleaned if necessary to improve their appearance. Painting of any part of the coil surface is not permitted unless otherwise provided in this specification.

6. Testing and Inspection

A. Tests Prior to Coil Winding

a. Water Passage through Conductor

Prior to coil winding, a polished steel ball of a diameter not less than 0.8 the diameter of the coolant hole shall be blown through the cooling holes of each conductor as a check on the presence of any appreciable obstruction to water flow over the length of conductor.

b. Conductor Surface Condition

It is the responsibility of the seller to assure that each conductor surface condition is sound and suitable to be used as material for the coil assembly.

B. Tests Prior after Coil Winding

a. Leak Tests The Vendor may select I or ii:

i. Vacuum Leak Check

Prior to application of the insulating material, each coil shall have its water circuit thoroughly washed by flowing water at 180 - 200F through the circuit for at least 15 minutes followed by a subsequent washing with water at room temperature for 15 minutes. The water passage shall then be dried by evacuating or blowing air through each circuit. When dry, the entire assembly shall be enclosed with a polyethylene bag or other suitable enclosure and a helium leak test shall be made on the entire assembly. As a substitute check, a halogen sensitive detector may be utilized using halogen compound under 120 psi pressure in the bore of the conductor while the joints are probed. No indication of a leak is allowable.

ii. Hydrostatic Test

The coil shall be filled with water and pressurized to 300 ±15 psig. When the coil is cool, the valve between the coil and the pressure source shall then be closed. Test data recorded on the Coil Data Sheet at intervals of 15 minutes over a 60-minute period shall include the following:

Coil water pressure to the nearest 0.5 psig.

Coil water temperature to within 2F.

Coil shall show no evidence of external leakage or internal pressure drop other than that resulting from a reduction in water temperature.

b. Water Flow Test

With water temperature in the range of 68F to 75*F* and appropriate pressure drop across the inlet and outlet of the coil, a minimum water flow shall be as specified in Table 1, above.

C. Coil Resistance

The electrical resistance of each coil assembly shall be measured by using a bridge capable of measuring DC resistance to within 1%. Test data recorded on the Coil Data Sheet shall include the following:

Coil resistance in micro-ohms; see Design Data sheet for calculated value.

Copper conductor temperature to within 2F.

Coils with resistance measuring more than ±5% from the mean value (defined as the average resistance of the first four coils of this order) shall not be completed without approval of

the purchaser.

D. Tests After Impregnation and Curing

a. Insulation to Ground

The insulation to ground shall be tested to withstand 1000 V DC mm. for one minute applied between each coil and aluminum foil wrapped tightly all over the insulation surface. Insulation resistance, as derived from applied voltage and leakage current, shall not be less than three megohm. The data shall be recorded on the Coil Data Sheet.

b. ImpulseTest

An impulse ("ring") test shall be performed on each coil, in which voltage pulses of 250 and 1000 volts shall be impressed across an LRC circuit including the magnet, and the test shall verify that the resulting damped oscillation waveform scales properly with voltage. There must be no high frequency noise on the oscillating signal that would indicate a short.

c. Water Flow Test

In order to assure that the water passage is not obstructed during impregnation and curing operating, test described in 6-B-b shall be repeated and recorded.

d. Coil Inspection

A visual surface inspection shall be made of each coil after ground insulation has been applied and cured. There shall be no surface defects.

7. Marking

Prior to shipping, each coil shall be identified by a number consisting of the entire subassembly drawing number plus a three-digit serial number. The number shall be applied by white epoxy paint to the size and location shown on the subassembly. drawing. The sequence of serial numbers shall be specified in the purchase order. No other permanent markings may be applied without the written approval of the purchaser.

8. Shipping

A.
Water shall be completely drained from each coil and the coolant hole dried by blowing air through it.When dry, both ends shall be suitably sealed. Flare fittings shall be protected with suitable plastic caps which shall also serve to seal off the water passages.

B. Coils shall be packed in completely enclosed containers. Coils shall be covered by waterproof shrouding and shall be cushioned and blocked to prevent damage by impact. Special attention shall be given to protection of coil leads. Containers shall be designed to permit stacking one on top of the other.

C. Containers shall be marked externally so that the particular coil inside any container may be identified without opening the container.

COIL DATA SHEET

Coil Serial No._____ Date:_____

Coil Weight _____ By:_____

Vacuum Leak Check No Leak	Leak		Repaired	
Hydrostatic Check Interval Pressure (psig) Temperature **- F**	**15** mm.	30 mm.	*45* mm.	60 mm.

Water Flow Pressure Drop = psig Temperature =
(After Potting) GPM =

DC Resistance Coil Temperature =

(After Potting) Resistance =

Ground Insulation Check Voltage (V DC) 500 Leak Current (micro-A)	1000 1500 2000

Turn Insulation Check Surge Voltage Volts @ Kilocycles

Scope Trace Photo Attached

Any repair done on this coil? No_____,
Yes_____ If yes, explain in detail: