| LCLS Interface Control Document# 1.1-511 | Project Management | Revision 0 |
|---|---|---|

# Interim Machine Protection System


| | | |
|---|---|---|
| Stephen Norum<br>Author | Signature | 2006-05-12<br>Date |
| Hamid Shoaee<br>System Manager | Signature | Date |
| David Schultz<br>Electron Beam Systems Manager | Signature | 5-15/06<br>Date |
| Patrick Krejcik<br>System Physicist | Signature | 5-12-06<br>Date |
| Darren Marsh<br>Quality Assurance Manager | Signature | 5/15/06<br>Date |


Brief Summary: The Machine Protection System (MPS) is an interlock system to turn off or reduce the rate of the beam in response to fault conditions that may either damage or cause unwanted activation of machine parts. Many systems provide input to the MPS.

Change History Log

| Revision Number | Revision Date | Sections Affected | Description of Change |
|---|---|---|---|
| 000 | May 3rd, 2006 | All | Initial Version |

This document has been formatted for two-sided (duplex) printing.

| | | |
|---|---|---|
| Stephen Schuh<br>Section 2 | Signature | Date |
| Sheng Peng<br>Sections 3 to 10 | Signature | Date |
| Tim Montagne<br>Sections 11 to 12 | Signature | Date |
| Michael Cecere<br>Sections 13 to 14 | Signature | Date |
| Stephen Norum<br>Section 15 | Signature | Date |
| Arturo Alarcon<br>Section 15 | Signature | Date |
| Section 16 | Signature | Date |
| Anthony Tilghman<br>Sections 17 to 20 | Signature | Date |
| Bill White<br>Sections 21 to 22 | Signature | Date |

This page intentionally contains only this sentence.

# Contents

**1 Introduction** **9**
1.1 LDIM Signals . . . 9
1.2 LDIM/Device Connections . . . 9
1.3 Signal Power . . . 9
1.4 Signal Cables . . . 10

**2 Vacuum System** **11**
2.1 Input Signals . . . 11
2.2 Wiring . . . 11

**3 Profile Monitors** **13**
3.1 Input Signals . . . 13
3.2 Wiring . . . 13

**4 Faraday Cup** **15**
4.1 Input Signals . . . 15
4.2 Wiring . . . 15

**5 Alignment Mirror** **17**
5.1 Input Signals . . . 17
5.2 Wiring . . . 17

**6 Wakefield Shield** **19**
6.1 Input Signals . . . 19
6.2 Wiring . . . 19

**7 Cerenkov Radiator** **21**
7.1 Input Signals . . . 21
7.2 Wiring . . . 21

**8 BL11 Mirror** **23**
8.1 Input Signals . . . 23
8.2 Wiring . . . 23

**9 Tune-up Dump** **25**
9.1 Input Signals . . . 25
9.2 Wiring . . . 25

**10 Peak Laser Power Detector** **27**
10.1 Input Signals . . . . . 27
10.2 Wiring . . . . . 27

**11 Flow Switch** **29**
11.1 Input Signals . . . . . 29
11.2 Wiring . . . . . 29

**12 Backward Beam Stopper** **31**
12.1 Input Signals . . . . . 31
12.2 Wiring . . . . . 31

**13 Toroid** **33**
13.1 Input Signals . . . . . 33
13.2 Output Signals . . . . . 33
13.3 Wiring . . . . . 33

**14 Toroid Comparator** **35**
14.1 Input Signals . . . . . 35
14.2 Output Signals . . . . . 35
14.3 Wiring . . . . . 37

**15 Magnets** **39**
15.1 Input Signals . . . . . 39
15.2 Wiring . . . . . 39

**16 Event Generator** **41**
16.1 Input Signals . . . . . 41
16.2 Wiring . . . . . 41

**17 Tone Interrupt (TIU) Summary** **43**
17.1 Input Signals . . . . . 43
17.2 Wiring . . . . . 43

**18 Protection Ion Chambers** **45**
18.1 Input Signals . . . . . 45
18.2 Wiring . . . . . 45

**19 Panofsky Long Ion Chamber** **47**
19.1 Input Signals . . . . . 47
19.2 Wiring . . . . . 47

**20 Linac PLIC** **49**

**21 Injector Mechanical Shutter** **51**
21.1 Input Signals . . . . . 51
21.2 Output Signals . . . . . 51
21.3 Wiring . . . . . 51

**22 Pockels Cell** **53**
22.1 Output Signals . . . . . 53
22.2 Wiring . . . . . 53

This page intentionally contains only this sentence.

# 1 Introduction

The Machine Protection System (MPS) is an interlock system to turn off or reduce the rate of the beam in response to fault conditions that may either damage or cause unwanted activation of machine parts. The three active devices in the LCLS MPS are an abort kicker that is able to kick a single electron bunch, and a Pockels cell and mechanical shutter that block the laser light.

This document discusses the interface of the MPS and its connections to other systems. Input signals refer to signals that originate from non-MPS devices and are sent to the MPS. Output signals refer to signals that originate from the MPS and are sent to non-MPS devices.

## 1.1 LDIM Signals

LDIM and LDIM compatible signals refer to signals compatible with the Latching Digital Input Modules' (LDIM) High Threshold Mode. The logic states of the LDIM inputs are as defined in Table 1.1.

**Table 1.1.** LDIM Logic Levels

| Voltage (V) | Logic State |
|---|---|
| −30 to 9 | 0 |
| 9 to 11 | – |
| 11 to 30 | 1 |

See Chapter 19 of the SLC Control System Hardware Manual for more information (`http://www.slac.stanford.edu/grp/cd/soft/wwwman/hard.www/chapter19.html`).

## 1.2 LDIM/Device Connections

Signals input to the LDIM are passed up to the SLC MPG as shown in Figure 1.1.

## 1.3 Signal Power

A shared 24V power supply will be available to each system to power their MPS signals.

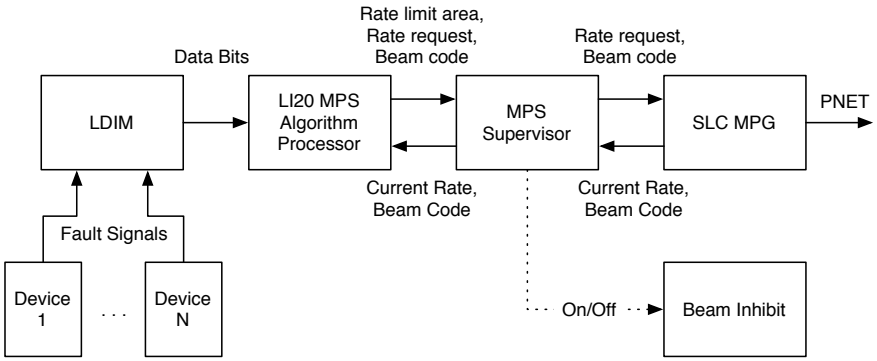


**Figure 1.1.** Generic Signal Flow of Interim MPS

## 1.4 Signal Cables

Each system will be responsible for their MPS fault signal cables. The MPS will provide a cross connect location for these signal cables.

# 2 Vacuum System

Status of all pneumatic and manual beam line valves is sent to the MPS so that the MPS can prevent the electron beam from striking a valve. See Vacuum Controls Requirements (ESD 1.1-326), Section 2.4.1.

Status of the gun waveguide vacuum interlock is sent to the MPS so that the MPS can zero rate the electron beam when the waveguide vacuum pressure is elevated.

## 2.1 Input Signals

Table 2.1 lists interlock signals sent to the MPS from the Vacuum System.

**Table 2.1.** Vacuum System Signals

| Signal | Format | OK Condition | Fault Condition |
|---|---|---|---|
| VVPG IN20 BL155 (VV01) Position | LDIM Signal | Opened | Not opened |
| VVPG IN20 BL435 (VV02) Position | LDIM Signal | Opened | Not opened |
| VVPG IN20 BL545 (VV03) Position | LDIM Signal | Opened | Not opened |
| VVPG IN20 BL635 (VV04) Position | LDIM Signal | Opened | Not opened |
| VVPG IN20 BL915 (VVS1) Position | LDIM Signal | Opened | Not opened |
| VVMG LI21 BL175 (VVX1) Position | LDIM Signal | Opened | Not opened |
| VVMG LI21 BL195 (VVX2) Position | LDIM Signal | Opened | Not opened |
| 20-6 Waveguide Vacuum Summary | LDIM Signal | OK | Faulted |

**Table 2.2.** Vacuum System States

| Input | State |
|---|---|
| 0 | Not Opened/Faulted |
| 1 | Opened/OK |

## 2.2 Wiring

The vacuum system will connect to the MPS as shown in Figure 2.1.

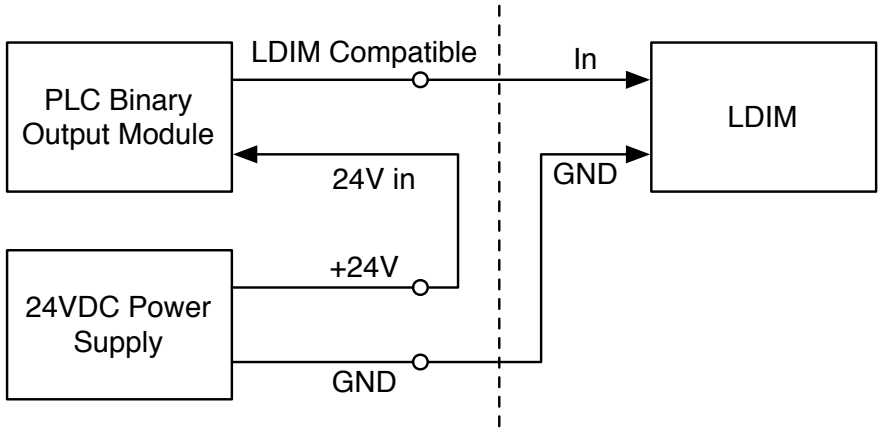


**Figure 2.1.** Wiring Diagram for Vacuum System to MPS

# 3 Profile Monitors

Profile monitors provide their limit switch status to the MPS as two LDIM compatible signals. One LDIM signal is given for the Out limit switch, and another LDIM signal is given for the In limit switch.

## 3.1 Input Signals

**Table 3.1.** Profile Monitor Signals

| Signal | Format | State 1 | State 2 | State 3 | State 4 |
|---|---|---|---|---|---|
| YAG01 | Two LDIM Signals | Out | In | Moving | Broken |
| YAG02 | Two LDIM Signals | Out | In | Moving | Broken |
| YAG03 | Two LDIM Signals | Out | In | Moving | Broken |
| YAG04 | Two LDIM Signals | Out | In | Moving | Broken |
| YAGG1 | Two LDIM Signals | Out | In | Moving | Broken |
| OTR1 | Two LDIM Signals | Out | In | Moving | Broken |
| YAGS1 | Two LDIM Signals | Out | In | Moving | Broken |
| YAGS2 | Two LDIM Signals | Out | In | Moving | Broken |
| OTRH1[1] | Two LDIM Signals | Out | In | Moving | Broken |
| OTRH2[1] | Two LDIM Signals | Out | In | Moving | Broken |
| OTR2 | Two LDIM Signals | Out | In | Moving | Broken |
| OTR3 | Two LDIM Signals | Out | In | Moving | Broken |
| OTR4 | Two LDIM Signals | Out | In | Moving | Broken |
| OTRS1 | Two LDIM Signals | Out | In | Moving | Broken |
| OTR11 | Two LDIM Signals | Out | In | Moving | Broken |
| OTR12 | Two LDIM Signals | Out | In | Moving | Broken |

## 3.2 Wiring

Profile monitor limit switches will connect to the MPS as shown in Figure 3.1.

[1] This profile monitor will not be used for injector commissioning.

**Table 3.2.** Profile Monitor States

| Data 2 | Data 1 | State |
|---|---|---|
| 0 | 0 | Moving/Hang |
| 0 | 1 | In |
| 1 | 0 | Out |
| 1 | 1 | Broken |

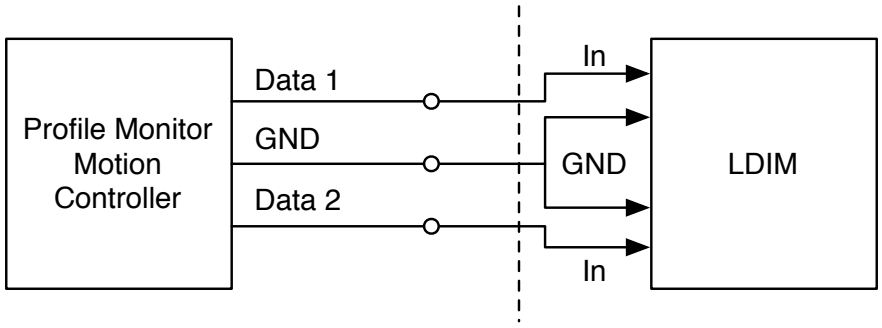


**Figure 3.1.** Wiring Diagram for Profile Monitor Limit Switches to MPS

# 4 Faraday Cup

The Faraday Cup provides its limit switch status to the MPS as two LDIM signals. One LDIM signal is given for the Out limit switch, and another LDIM signal is given for the In limit switch.

## 4.1 Input Signals

**Table 4.1.** Faraday Cup Signals

| Signal | Format | State 1 | State 2 | State 3 | State 4 |
|---|---|---|---|---|---|
| FC01 Position | Two LDIM Signals | Out | In | Moving | Broken |

**Table 4.2.** Faraday Cup States

| Data 2 | Data 1 | State |
|---|---|---|
| 0 | 0 | Moving/Hang |
| 0 | 1 | In |
| 1 | 0 | Out |
| 1 | 1 | Broken |

## 4.2 Wiring

Faraday cup limit switches will connect to the MPS as shown in Figure 4.1.

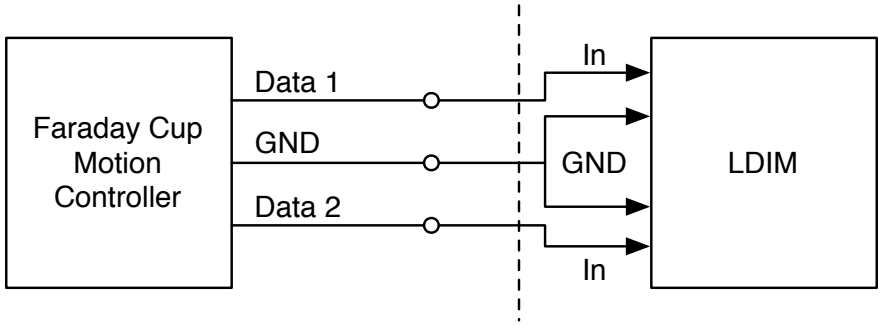


**Figure 4.1.** Wiring Diagram for Faraday Cup Limit Switches to MPS

# 5 Alignment Mirror

The Alignment Mirror, AM01, has a single limit switch providing the mirror's Out status as an LDIM signal.

## 5.1 Input Signals

**Table 5.1.** Alignment Mirror Signal

| Signal | Format | State 1 | State 2 |
|---|---|---|---|
| AM01 | LDIM Signal | Out | Not Out |

**Table 5.2.** Alignment Mirror States

| Input | State |
|---|---|
| 0 | Not Out |
| 1 | Out |

## 5.2 Wiring

The alignment mirror limit switch will connect to the MPS as shown in Figure 5.1.

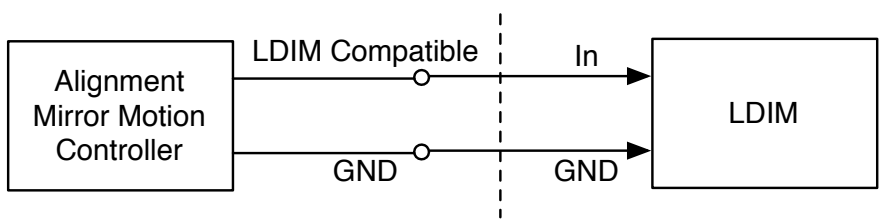


**Figure 5.1.** Wiring Diagram for Alignment Mirror Limit Switch to MPS

This page intentionally contains only this sentence.

# 6 Wakefield Shield

The wakefield shield provides its limit switch status to the MPS as two LDIM signals. One LDIM signal is given for the Out limit switch, and another LDIM signal is given for the In limit switch.

## 6.1 Input Signals

**Table 6.1.** Wakefield Shield Signals

| Signal | Format | State 1 | State 2 | State 3 | State 4 |
|---|---|---|---|---|---|
| Wakefield Shield Position | Two LDIM Signals | Out | In | Moving | Broken |

**Table 6.2.** Wakefield Shield States

| Data 2 | Data 1 | State |
|---|---|---|
| 0 | 0 | Moving/Hang |
| 0 | 1 | In |
| 1 | 0 | Out |
| 1 | 1 | Broken |

## 6.2 Wiring

The Wakefield Shield limit switch will connect to the MPS as shown in Figure 6.1.

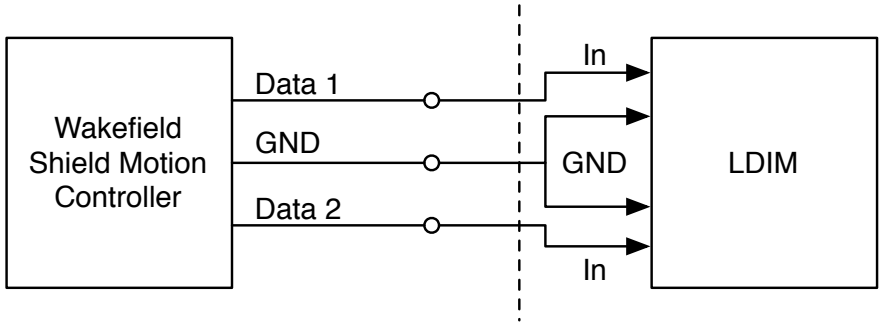


**Figure 6.1.** Wiring Diagram for Wakefield Shield Limit Switches to MPS

# 7 Cerenkov Radiator

Cerenkov radiators provide their limit switch status to the MPS as two LDIM signals. One LDIM signal is given for the Out limit switch, and another LDIM signal is given for the In limit switch. CR01 and CRG1 have four actuators in total, however only two are in the beam path.

## 7.1 Input Signals

**Table 7.1.** Cerenkov Radiator Signals

| Signal | Format | State 1 | State 2 | State 3 | State 4 |
|---|---|---|---|---|---|
| CR01 Position | Two LDIM Signals | Out | In | Moving | Broken |
| CRG1 Position | Two LDIM Signals | Out | In | Moving | Broken |

**Table 7.2.** Cerenkov Radiator States

| Data 2 | Data 1 | State |
|---|---|---|
| 0 | 0 | Moving/Hang |
| 0 | 1 | In |
| 1 | 0 | Out |
| 1 | 1 | Broken |

## 7.2 Wiring

The Cerenkov Radiator limit switches will connect to the MPS as shown in Figure 7.1.

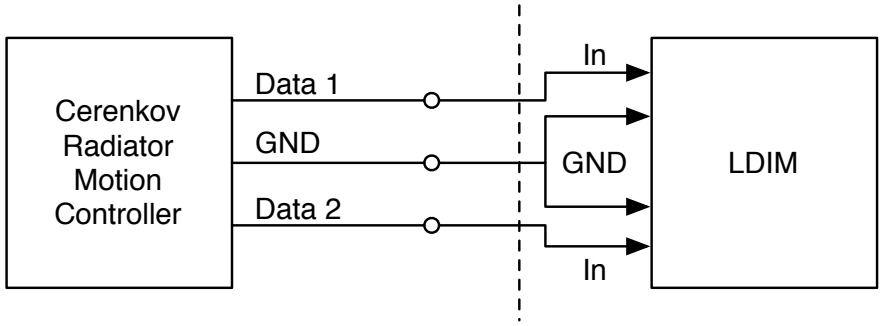


**Figure 7.1.** Wiring Diagram for Cerenkov Radiator to MPS

# 8 BL11 Mirror

The BL11 Mirror provides its limit switch status to the MPS as two LDIM signals. One LDIM signal is given for the Out limit switch, and another LDIM signal is given for the In limit switch.

## 8.1 Input Signals

**Table 8.1.** BL11 Mirror Limit Switch Signals

| Signal | Format | State 1 | State 2 | State 3 | State 4 |
|---|---|---|---|---|---|
| BL11 Position | Two LDIM Signals | Out | In | Moving | Broken |

**Table 8.2.** BL11 Mirror States

| Data 2 | Data 1 | State |
|---|---|---|
| 0 | 0 | Moving/Hang |
| 0 | 1 | In |
| 1 | 0 | Out |
| 1 | 1 | Broken |

## 8.2 Wiring

The BL11 Mirror limit switches will connect to the MPS as shown in Figure 8.1.

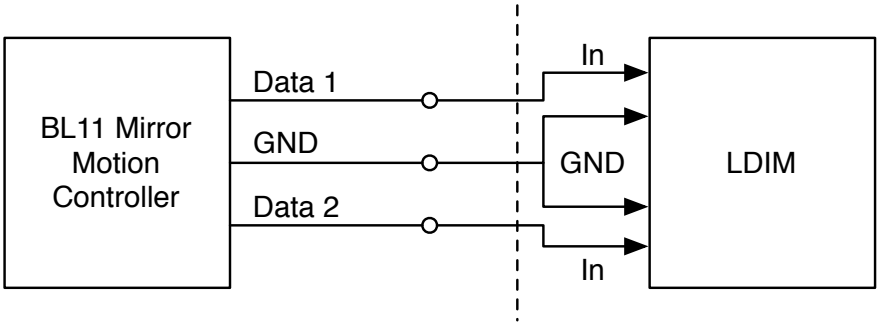


**Figure 8.1.** Wiring Diagram of BL11 Mirror to MPS

# 9 Tune-up Dump

The TD11 Tune-up Dump provides its limit switch status to the MPS as two LDIM signals. One LDIM signal is given for the Out limit switch, and another LDIM signal is given for the In limit switch.

## 9.1 Input Signals

**Table 9.1.** Tune-up Dump Limit Switch Signals

| Signal | Format | State 1 | State 2 | State 3 | State 4 |
|---|---|---|---|---|---|
| TD11 Position | Two LDIM Signals | Out | In | Moving | Broken |

**Table 9.2.** Tune-up Dump States

| Data 2 | Data 1 | State |
|---|---|---|
| 0 | 0 | Moving |
| 0 | 1 | In |
| 1 | 0 | Out |
| 1 | 1 | Broken |

## 9.2 Wiring

The Tune-up Dump limit switches will connect to the MPS as shown in Figure 9.1.

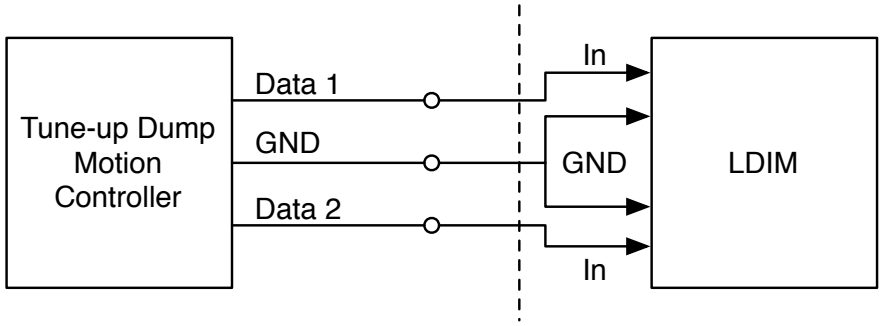


**Figure 9.1.** Wiring Diagram of Tune-up Dump Limit Switches to MPS

# 10 Peak Laser Power Detector

The Peak Laser Power Detector provides its status as a single LDIM signal to the MPS.

## 10.1 Input Signals

**Table 10.1.** Peak Laser Power Detector Signal

| Signal | Format | State 1 | State 2 |
|---|---|---|---|
| Peak Laser Power Detector | LDIM Signal | OK | Fault |

**Table 10.2.** Peak Laser Power Detector States

| Input | State |
|---|---|
| 0 | Fault |
| 1 | OK |

## 10.2 Wiring

The Peak Laser Power Detector will connect to the MPS as shown in Figure 10.1.

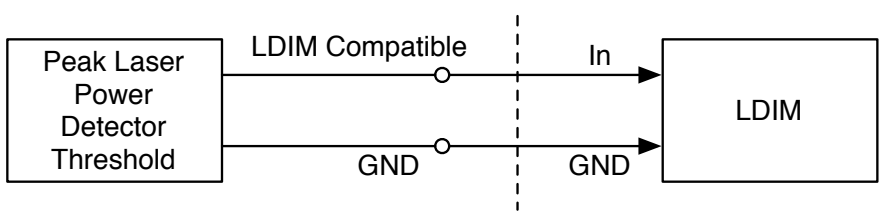


**Figure 10.1.** Wiring Diagram of Peak Laser Power Detector to MPS

This page intentionally contains only this sentence.

# 11 Flow Switch

The flow switch from TD11 has a single signal giving the water's flow status as an LDIM compatible signal.

## 11.1 Input Signals

**Table 11.1.** Flow Meter Signals

| Signal | Format | State 1 | State 2 |
|---|---|---|---|
| TD11 | LDIM Signal | OK | Fault |

**Table 11.2.** Flow Meter States

| Input | State |
|---|---|
| 0 | Fault |
| 1 | OK |

## 11.2 Wiring

The TD11 flow switch will connect to the MPS as shown in Figure 11.1.

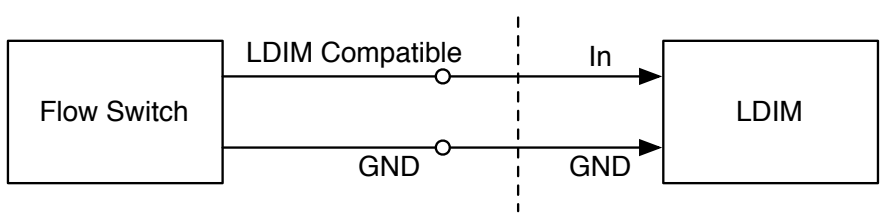


**Figure 11.1.** Wiring Diagram for Flow Switches to MPS

This page intentionally contains only this sentence.

# 12 Backward Beam Stopper

The Backward Beam Stopper, RST1, has a single limit switch providing the mirror's "out" status as an LDIM signal.

## 12.1 Input Signals

**Table 12.1.** Backward Beam Stopper Signal

| Signal | Format | State 1 | State 2 |
|---|---|---|---|
| RST1 | LDIM Signal | Out | Not Out |

**Table 12.2.** Backward Beam Stopper States

| Input | State |
|---|---|
| 0 | Not Out |
| 1 | Out |

## 12.2 Wiring

The Backward Beam Stopper Limit Switch will connect to the MPS as shown in Figure 12.1.

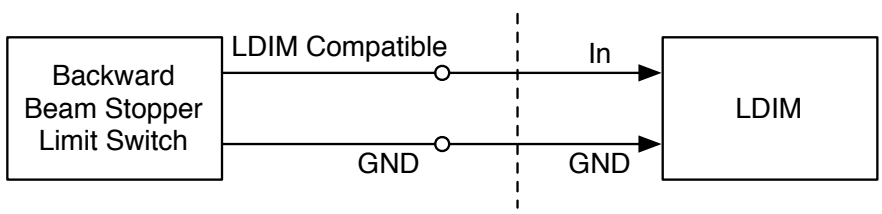


**Figure 12.1.** Wiring Diagram for Backward Beam Stopper Limit Switch to MPS

This page intentionally contains only this sentence.

# 13 Toroid

The only toroid that provides a fault signal without comparison to another toroid is IM01. Its electronics give the MPS an LDIM fault signal.

## 13.1 Input Signals

**Table 13.1.** Toroids Input Signal

| Signal | Format | State 1 | State 2 |
|---|---|---|---|
| IM01 | LDIM Signal | OK | Exceeded Threshold 1 |

**Table 13.2.** Toroid States

| Toroid Signal | State |
|---|---|
| 0 | Exceeded Threshold 1/Fault |
| 1 | OK |

## 13.2 Output Signals

**Table 13.3.** Toroid Output Signal

| Signal | Format | Value |
|---|---|---|
| IM01 Threshold | EPICS PV | Threshold 1 |

## 13.3 Wiring

Toroids will connect to the MPS as shown in Figure 13.1.

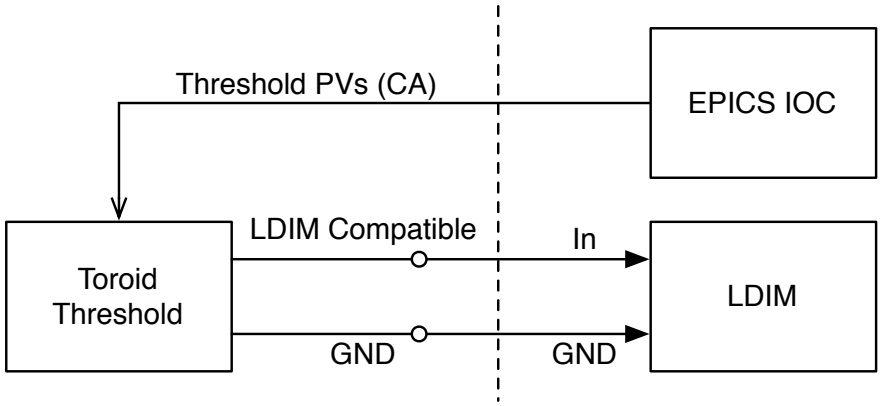


**Figure 13.1.** Wiring Diagram for Toroid Threshold to MPS

# 14 Toroid Comparator

The toroid comparator electronics give two LDIM signals each to the MPS to supply the beam loss information. Each toroid will also provide its own fault signal and beam present signal.

## 14.1 Input Signals

Two toroid signals are compared to create a toroid comparator. The input signals and states are shown in Table 14.1 and Table 14.2.

**Table 14.1.** Toroid Comparators

| Toroid Pair | Format | State 1 | State 2 | State 3 | State 4 |
|---|---|---|---|---|---|
| IM02/IM03 | Two LDIM Signals | OK | >Threshold 1 | >Threshold 2 | Invalid |
| IM02/IMS1 | Two LDIM Signals | OK | >Threshold 1 | >Threshold 2 | Invalid |
| IMBC1I/IMBC1O | Two LDIM Signals | OK | >Threshold 1 | >Threshold 2 | Invalid |

**Table 14.2.** Toroid Comparator States

| Data 2 | Data 1 | State |
|---|---|---|
| 0 | 0 | Invalid/Fault |
| 0 | 1 | >Threshold 1 |
| 1 | 0 | >Threshold 2 |
| 1 | 1 | OK |

Each toroid also provides a fault signal and a beam present signal to the MPS as listed in Table 14.3 to Table 14.6.

## 14.2 Output Signals

The MPS will provide the toroid thresholds via EPICS PVs as shown in Table 14.7.

**Table 14.3.** Individual Toroid Fault Signals

| Toroid | Format | State 1 | State 2 |
|---|---|---|---|
| IM02 | LDIM Signal | Fault | OK |
| IM03 | LDIM Signal | Fault | OK |
| IMS1 | LDIM Signal | Fault | OK |
| IMBC1I | LDIM Signal | Fault | OK |
| IMBC1O | LDIM Signal | Fault | OK |

**Table 14.4.** Individual Toroid Fault States

| Data 1 | State |
|---|---|
| 0 | Fault |
| 1 | OK |

**Table 14.5.** Individual Toroid Beam Presence Signals

| Toroid | Format | State 1 | State 2 |
|---|---|---|---|
| IM02 | LDIM Signal | Beam Present | No Beam Present |
| IM03 | LDIM Signal | Beam Present | No Beam Present |
| IMS1 | LDIM Signal | Beam Present | No Beam Present |
| IMBC1I | LDIM Signal | Beam Present | No Beam Present |
| IMBC1O | LDIM Signal | Beam Present | No Beam Present |

**Table 14.6.** Individual Toroid Beam Presence States

| Data 1 | State |
|---|---|
| 0 | Beam Present |
| 1 | No Beam Present |

**Table 14.7.** Toroid Comparator Output Signals

| Signal | Format | Value 1 | Value 2 |
|---|---|---|---|
| IM02/IM03 | EPICS PV | Threshold 1 | Threshold 2 |
| IM02/IMS1 | EPICS PV | Threshold 1 | Threshold 2 |
| IMBC1I/IMBC1O | EPICS PV | Threshold 1 | Threshold 2 |

## 14.3 Wiring

Toroid comparators will connect to the MPS as shown in Figure 14.1.

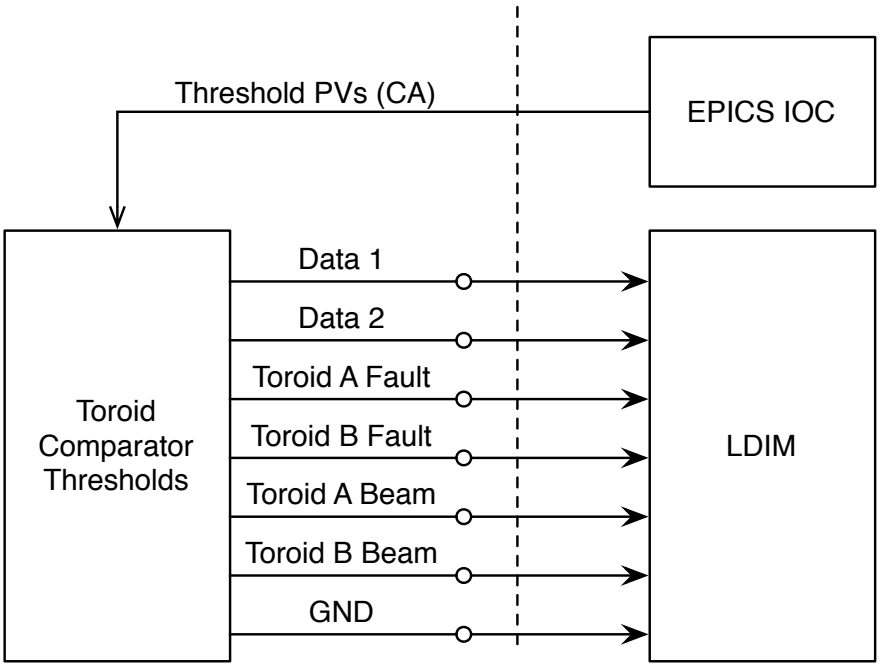


**Figure 14.1.** Wiring Diagram for Toroid Comparator Thresholds to MPS

This page intentionally contains only this sentence.

# 15 Magnets

Magnet signals originate from EPICS PVs and are converted to LDIM signals for the MPS by an IOC. The IOC generates a heartbeat signal. The heartbeat signal is high while the IOC is operating correctly and goes low when the IOC has a critical error.

## 15.1 Input Signals

**Table 15.1.** Magnet Signals

| Signal | Format | State 1 | State 2 |
|---|---|---|---|
| BXG | LDIM Signal | OK | Fault |
| BX01 | LDIM Signal | OK | Fault |
| BX02 | LDIM Signal | OK | Fault |
| BXS | LDIM Signal | OK | Fault |
| BX11 to BX14 | LDIM Signal | OK | Fault |
| IOC Heartbeat | LDIM Signal | OK | Fault |

**Table 15.2.** Magnet States

| Input | State |
|---|---|
| 0 | Fault |
| 1 | OK |

## 15.2 Wiring

The magnet power supply information will connect to the MPS as shown in Figure 15.1.

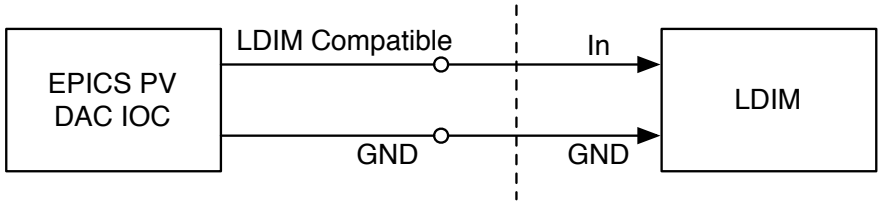


**Figure 15.1.** Wiring Diagram for Magnet's EPICS PV to LDIM IOC to MPS

# 16 Event Generator

An Event Generator (EVG) Watchdog will provide the fault status of the EVG to the MPS as an LDIM signal.

## 16.1 Input Signals

**Table 16.1.** Event Generator Watchdog Signal

| Signal | Format | State 1 | State 2 |
|---|---|---|---|
| EVG Watchdog | LDIM Signal | OK | Fault |

**Table 16.2.** Event Generator Watchdog States

| Input | State |
|---|---|
| 0 | Fault |
| 1 | OK |

## 16.2 Wiring

The Event Generator's Watchdog will connect to the MPS as shown in Figure 16.1.

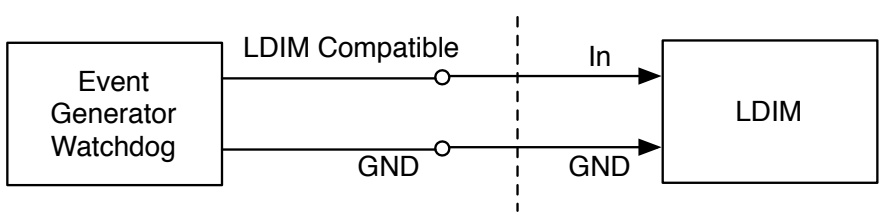


**Figure 16.1.** Wiring Diagram of Event Generator's Watchdog to MPS

This page intentionally contains only this sentence.

# 17 Tone Interrupt (TIU) Summary

A summary of Tone Interrupt Units' (TIU) signals from sector 21 to MCC will be given to the MPS as a single LDIM signal.

## 17.1 Input Signals

**Table 17.1.** TIU Summary Signals

| Signal | Format | State 1 | State 2 |
|---|---|---|---|
| TIU Summary | LDIM Signal | OK | Fault |

**Table 17.2.** TIU Summary States

| Input | State |
|---|---|
| 0 | Fault |
| 1 | OK |

## 17.2 Wiring

The TIU Summary Signal will connect to the MPS as shown in Figure 17.1.

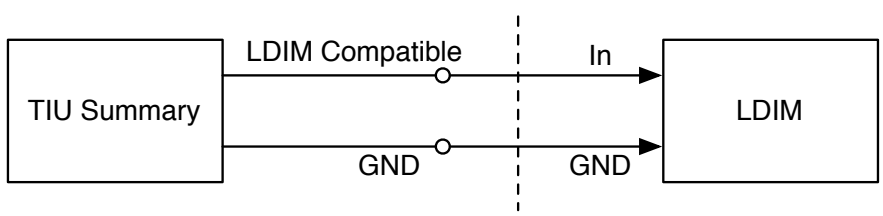


**Figure 17.1.** Wiring Diagram for TIU Summary Signal to MPS

This page intentionally contains only this sentence.

# 18 Protection Ion Chambers

Protection Ion Chamber (PIC) signals are fed through a Protection Ion Chamber Processor (PICP), also known as a PIC Module, to make the data available to the MPS. These PICs are used exclusively by the MPS. The PICP is connected to the MPS via a 1553 Transceiver VME Module.

## 18.1 Input Signals

**Table 18.1.** Protection Ion Chamber Signals

| PIC | Format | State 1 | State 2 | State 3 | State 4 |
|---|---|---|---|---|---|
| Near BX01 | PIC Signal | Out | Level 1 | Level 2 | Level 3 |
| Near BX02 | PIC Signal | Out | Level 1 | Level 2 | Level 3 |
| Near BXS | PIC Signal | Out | Level 1 | Level 2 | Level 3 |
| Near Linac-X | PIC Signal | Out | Level 1 | Level 2 | Level 3 |
| Near BC12 | PIC Signal | Out | Level 1 | Level 2 | Level 3 |
| Near BC13 | PIC Signal | Out | Level 1 | Level 2 | Level 3 |

## 18.2 Wiring

PICs will connect to the MPS as shown in Figure 18.1.

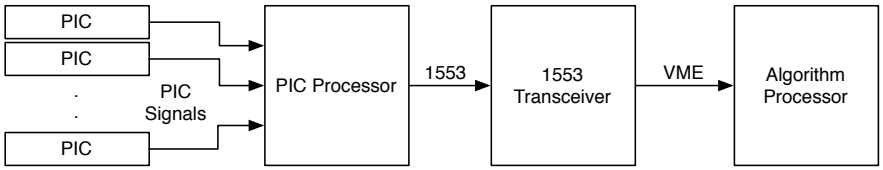


**Figure 18.1.** Wiring Diagram of PICs to MPS

This page intentionally contains only this sentence.

# 19 Panofsky Long Ion Chamber

Panofsky Long Ion Chamber (PIC) signals are fed through a Protection Ion Chamber Processor (PICP), also known as a PIC Module, to make the data available to the MPS. The PICP is connected to the MPS via a 1553 Transceiver VME Module.

## 19.1 Input Signals

**Table 19.1.** Panofsky Long Ion Chamber Signals

| PIC | Format | State 1 | State 2 | State 3 | State 4 |
|---|---|---|---|---|---|
| Injector PLIC 1 | PLIC Signal | Out | Level 1 | Level 2 | Level 3 |
| Injector PLIC 2 | PLIC Signal | Out | Level 1 | Level 2 | Level 3 |

## 19.2 Wiring

PLICs will connect to the MPS as shown in Figure 19.1.

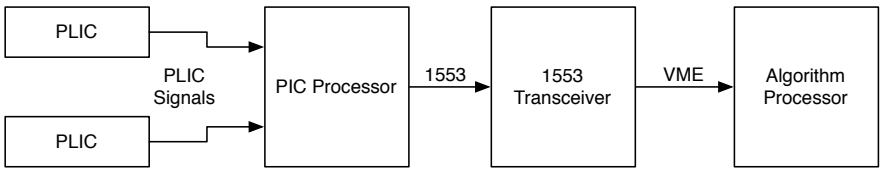


**Figure 19.1.** Wiring Diagram of PLICs to MPS

This page intentionally contains only this sentence.

# 20 Linac PLIC

The linac PLIC hardware is already in place. The LCLS relevant signals are gated out and input to the MPS. Anthony Tilghman is currently creating an input solution for the Interim MPS.

This page intentionally contains only this sentence.

# 21 Injector Mechanical Shutter

The Injector Mechanical Shutter provides its open/closed state to the MPS as an LDIM signal.

The MPS controls the Injector Mechanical Shutter with a TTL level output signal (0V and +5V for logic 0 and 1 respectively) triggered by events from the SLC MPG.

## 21.1 Input Signals

**Table 21.1.** Injector Mechanical Shutter Input Signal

| Signal | Format | State 1 | State 2 |
|---|---|---|---|
| Shutter Open State | LDIM Signal | Open | Closed |

**Table 21.2.** Injector Mechanical Shutter Input States

| Input | State |
|---|---|
| 0 | Open |
| 1 | Closed |

## 21.2 Output Signals

**Table 21.3.** Injector Mechanical Shutter Output Signal

| Signal | Format | State 1 | State 2 |
|---|---|---|---|
| Shutter Control | TTL Output | Open | Close |

## 21.3 Wiring

The Injector Mechanical shutter will connect to the MPS as shown in Figure 21.1 and Figure 21.2.

**Table 21.4.** Injector Mechanical Shutter Output States

| Output | State |
|---|---|
| 0 | Close |
| 1 | Open |

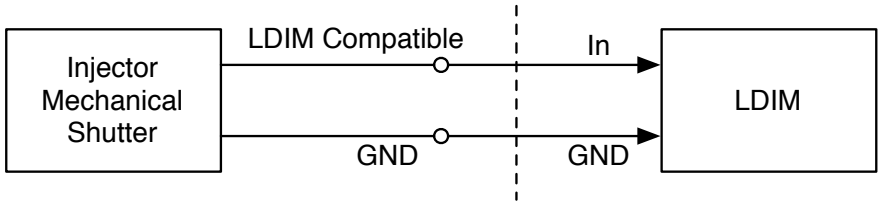


**Figure 21.1.** Wiring Diagram for Injector Mechanical Shutter Input Signal to MPS

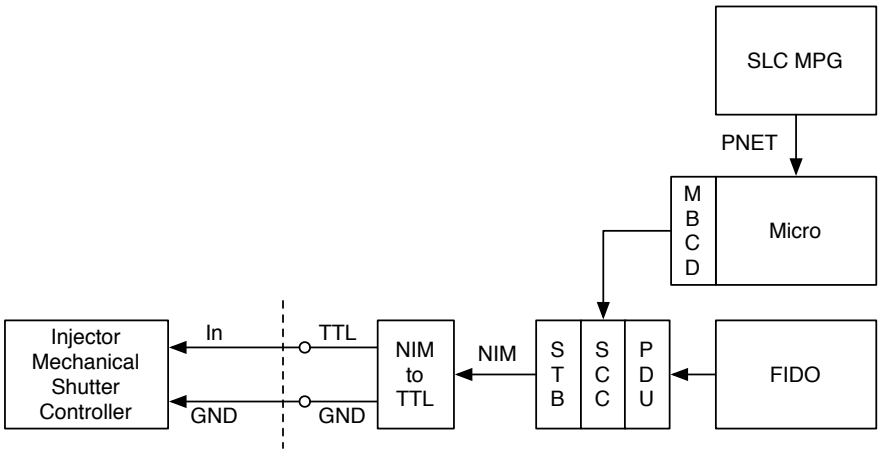


**Figure 21.2.** Wiring Diagram for MPS Injector Mechanical Shutter Control

# 22 Pockels Cell

The Pockels Cell requires a TTL level trigger from the MPS to open. A TTL level output signal (0V and +5V for logic 0 and 1 respectively) is triggered by events from the SLC MPG. Logic 0 will close the Pockels Cell. Logic 1 will permit the Pockels Cell to open.

## 22.1 Output Signals

**Table 22.1.** Pockels Cell Output Signal

| Signal | Format | State 1 | State 2 |
|---|---|---|---|
| Pockels Cell Control | TTL Output | Open | Close |

**Table 22.2.** Pockels Cell Output States

| Output | State |
|---|---|
| 0 | Close |
| 1 | Open |

## 22.2 Wiring

The Pockels cell will connect to the MPS as shown in Figure 22.1.

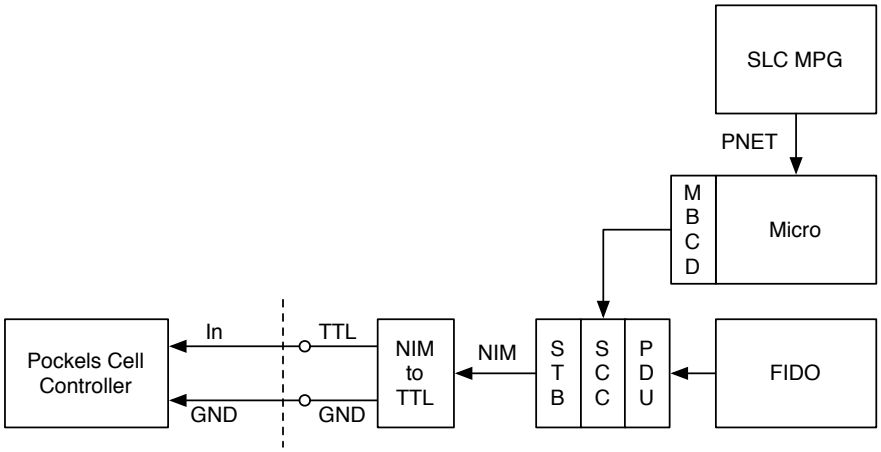


**Figure 22.1.** Wiring Diagram for MPS Pockels Cell Control